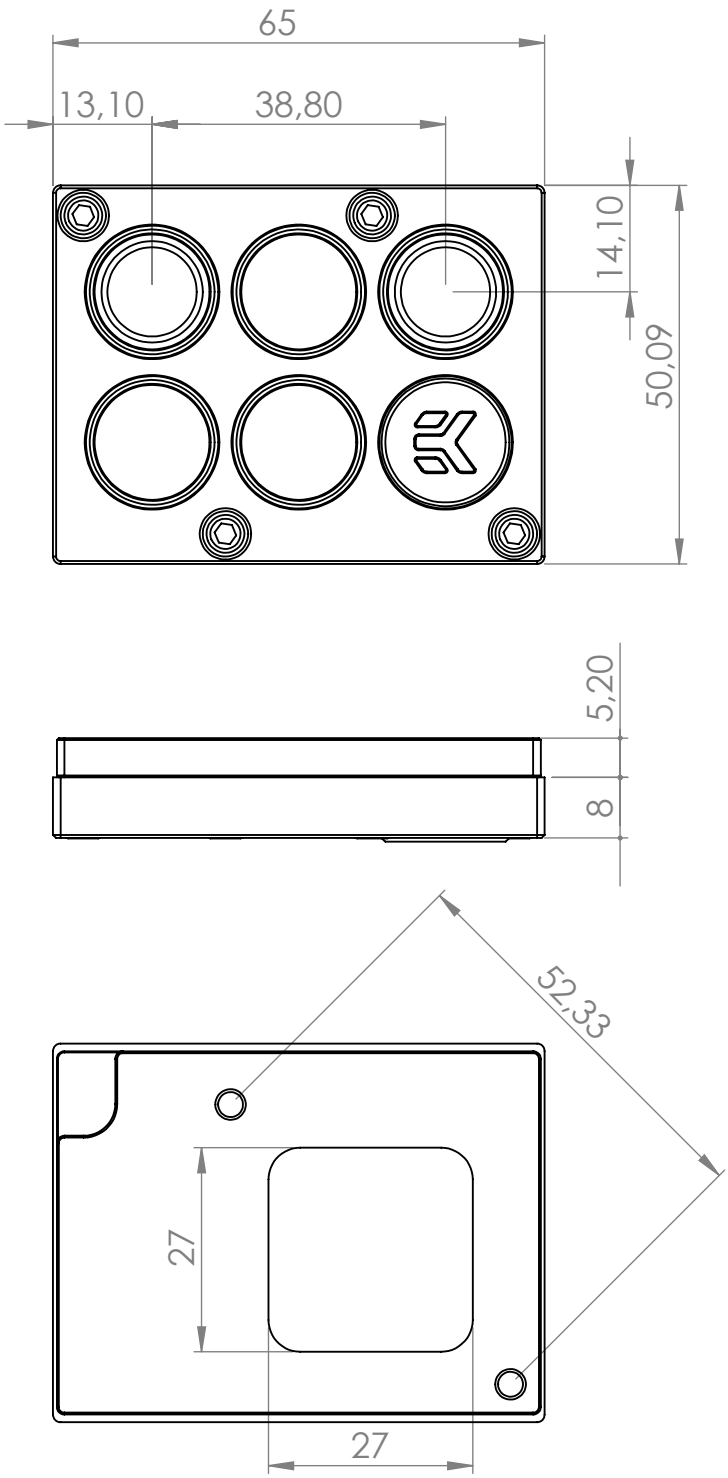

IMPORTANT DISCLOSURE: Drawing is copyrighted and property of EKWB d.o.o. company. Drawing is supplied only for easier compatibility recognition by user and can not be used for any other intention.

PRODUCT NAME: EK-FB KIT ASUS Z9PE-D8 (SB)		
Scale: 1:1	Sheet format A4	Sheet 1 of 2

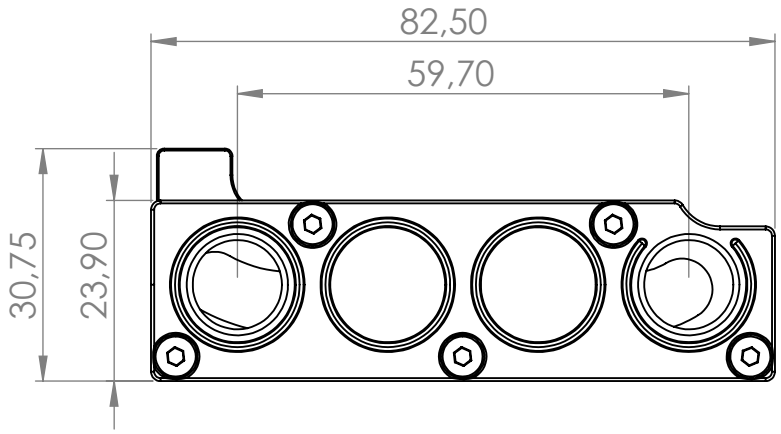

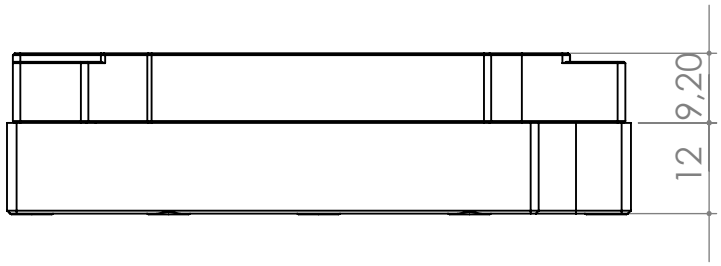

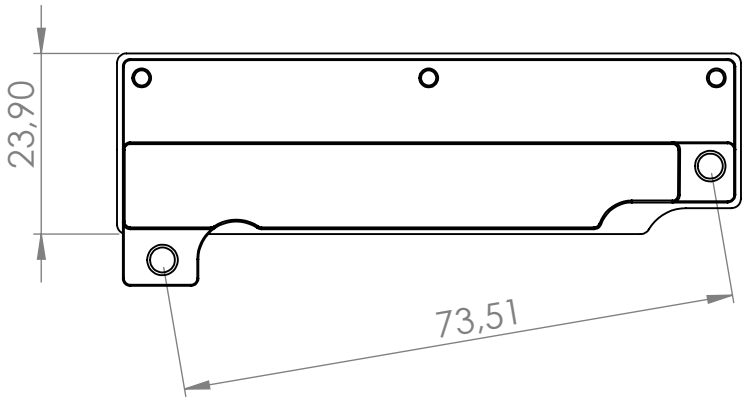

IMPORTANT DISCLOSURE: Drawing is copyrighted and property of EKWB d.o.o. company. Drawing is supplied only for easier compatibility recognition by user and can not be used for any other intention.

PRODUCT NAME: EK-FB KIT ASUS Z9PE-D8 (MOSFET)		
Scale: 1:1	Sheet format A4	Sheet 2 of 2