EK-Quantum Velocity² D-RGB AM5

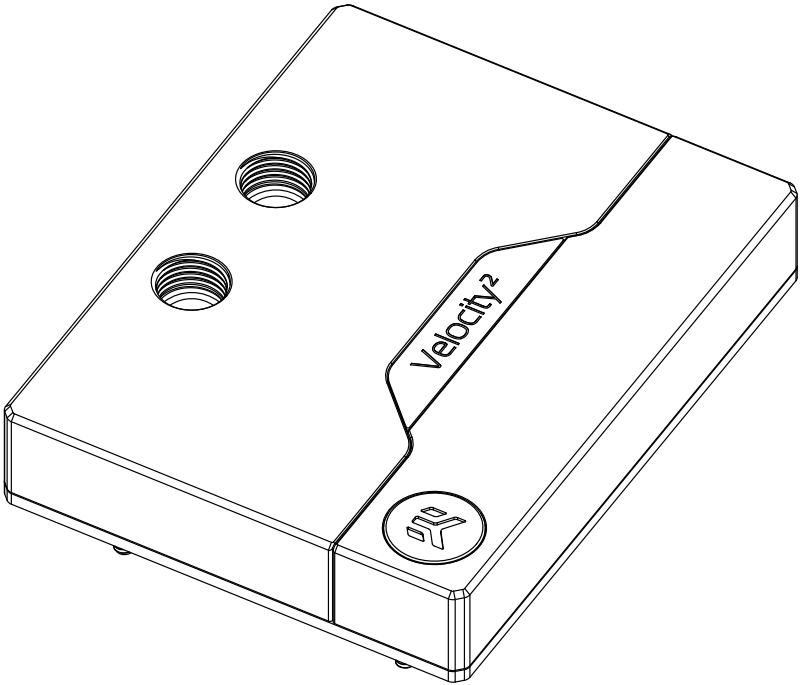

USER GUIDE

Please note the installation of the product is intended to be undertaken by an adequately trained and experienced person. You are installing the product at your own risk. If you are not properly trained or experienced or feel unsure about the installation procedure, please refrain from installing the product yourself and contact our tech support for assistance. We disclaim our liability for any damages to the product as well as incidental, consequential, or indirect damages incurred due to improper or inappropriate installation.

Before you start using this product, please follow these basic guidelines:

Please carefully read the manual before beginning the installation process.

The EK Fittings require only a small amount of force to screw them firmly in place since the liquid seal is ensured by the rubber O-ring gaskets.

The use of corrosion inhibiting coolants is always recommended for liquid cooling systems, and mandatory for nickel-plated water blocks.

Do not use pure distilled water! For best results, EK recommends the use of EK-Cryo Fuel coolants.

Make sure to thoroughly bleed air out of your water block, or you will not reach optimal performance.

TABLE OF CONTENTS

GENERAL INFORMATION ON WATER BLOCK COMPATIBILITY 4
BOX CONTENTS 4
WATER BLOCK DIMENSIONS 5
TECHNICAL SPECIFICATIONS AND WATER BLOCK PARTS 6
NICKEL PLEXI 6
NICKEL ACETAL 7
FULL NICKEL 8
SATIN TITANIUM 9
NICKEL GOLD 10
PREPARING THE MOTHERBOARD 11
INSTALLING THE WATER BLOCK 12
CONNECTING THE D-RGB LED STRIP 14
TESTING THE LOOP 15
WARRANTY 15
SUPPORT AND SERVICE 16

GENERAL INFORMATION ON WATER BLOCK COMPATIBILITY

This CPU liquid cooling unit is pre-assembled for use with modern AMD desktop socket-type motherboards. By default (out of the box) this water block supports the following CPU sockets:

- AMD® socket AM5

BOX CONTENTS

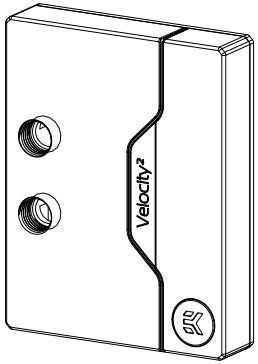

EK-Quantum Velocity² D-RGB AM5

Allen Key 2 mm (1 pc)

Allen Key 2.5 mm (1 pc)

Tx7 L-Shaped wrench (1 pc)

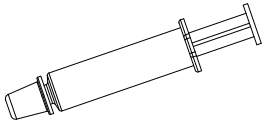

Thermal grease (1 pc)

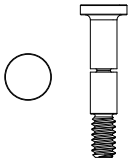

Velocity² Mounting Screw AM5 (Ni) (1 pc)

WATER BLOCK DIMENSIONS

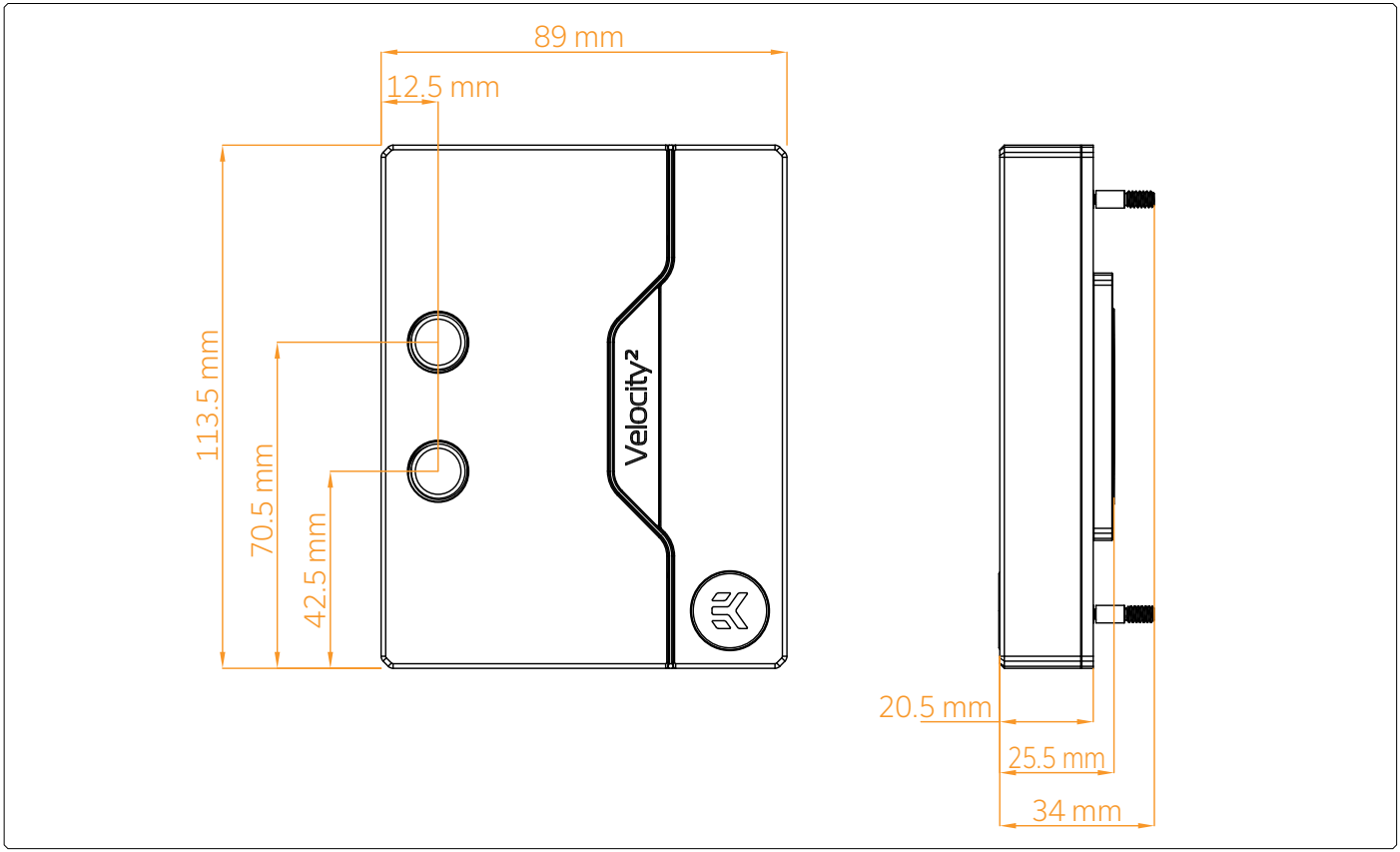

TECHNICAL SPECIFICATIONS AND WATER BLOCK PARTS

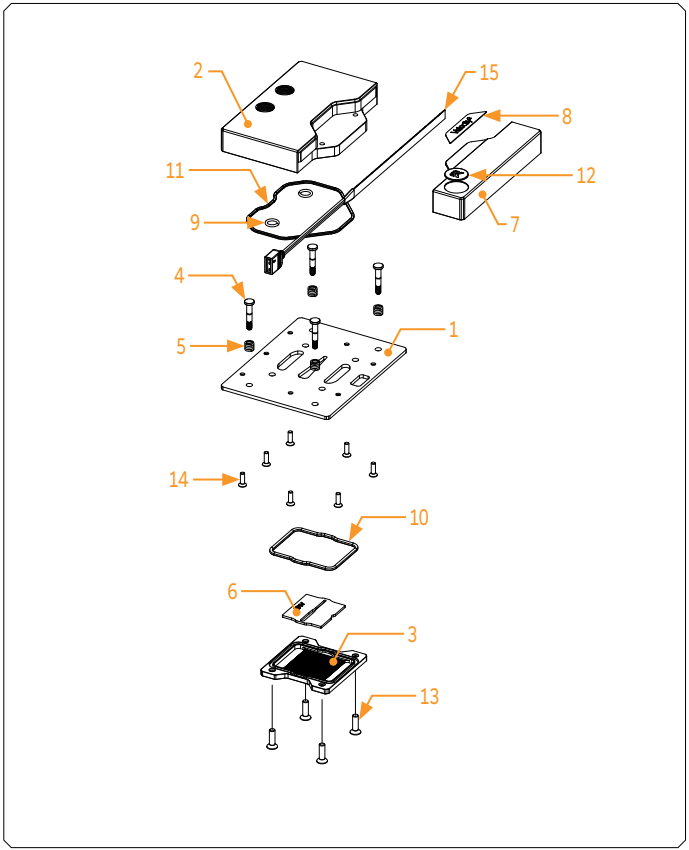

NICKEL PLEXI

Technical Specification:
- Dimensions: (L x H x W) - 89 x 113.5 x 34 mm
- D-RGB cable length: 50 cm
- D-RGB LED count: 16
- D-RGB connector: 3-pin 5V digital LED header (Pinout: +5V | Digital | Blocked | Ground)

Position	EAN	Description	Quantity
1	105747	Metal plate	1
2	103938	Top plate (Plexi)	1
3	105915	Coldplate (Nickel)	1
4	/	Mounting Screw AM5	/
4.1	105668	Mounting Screw AM5 (Short)	4
4.2	106037	Mounting Screw AM5 (Long)	4
5	8706	Mounting spring AM5	4
6	105901	Jet Plate	1
7	103936	Standout (Acetal)	1
8	103952	Mylar sticker	1
9	104774	OR 6 x 2 mm	2
10	104773	OR 53 x 2 mm	1
11	104772	OR 75 x 2 mm	1
12	100663	EK - Badge	1
13	104686	Screw M4 x 14 7991DIN	4
14	8252	Screw M3 x 10 7991DIN	7
15	103007	LED Strip 500/130 mm	1

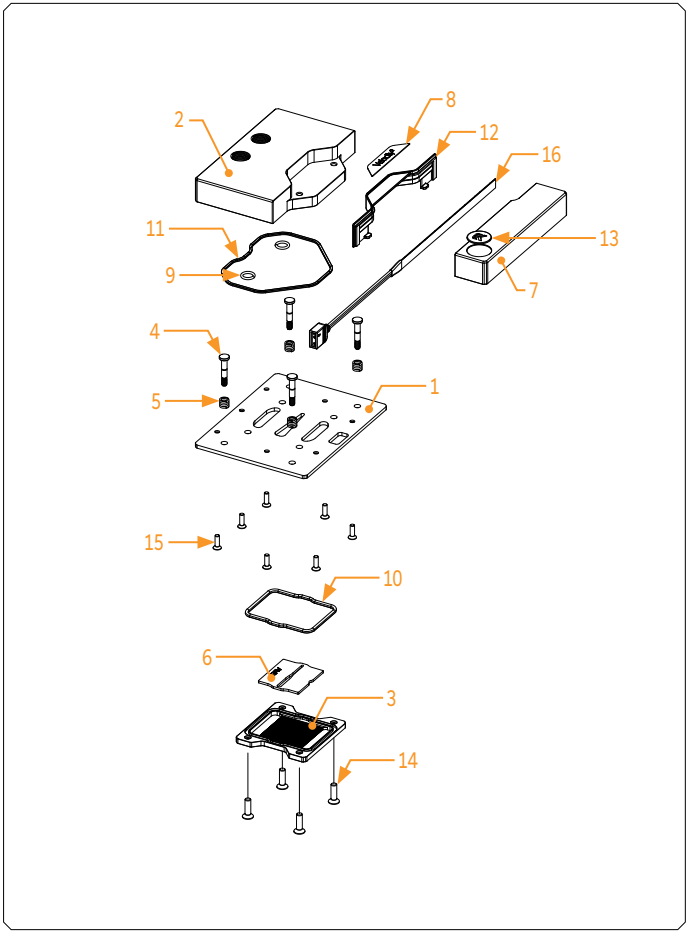

NICKEL ACETAL

Technical Specification:
- Dimensions: (L x H x W) - 89 x 113.5 x 34 mm
- D-RGB cable length: 50 cm
- D-RGB LED count: 16
- D-RGB connector: 3-pin 5V digital LED header (Pinout: +5V | Digital | Blocked | Ground)

Position	EAN	Description	Quantity
1	105747	Metal plate	1
2	103939	TOP plate (Acetal)	1
3	105915	Coldplate (Nickel)	1
4	/	Mounting Screw AM5	/
4.1	105668	Mounting Screw AM5 (Short)	4
4.2	106037	Mounting Screw AM5 (Long)	4
5	8706	Mounting spring AM5	4
6	105901	Jet plate	1
7	103937	Standout (Acetal)	1
8	103952	Mylar sticker	1
9	104774	OR 6 x 2 mm	2
10	104773	OR 53 x 2 mm	1
11	104772	OR 75 x 2 mm	1
12	103935	Light Guide	1
13	100663	EK - Badge	1
14	104686	Screw M4 x 14 7991DIN	4
15	8252	Screw M3 x 10 7991DIN	7
16	103007	LED Strip 500/130 mm	1

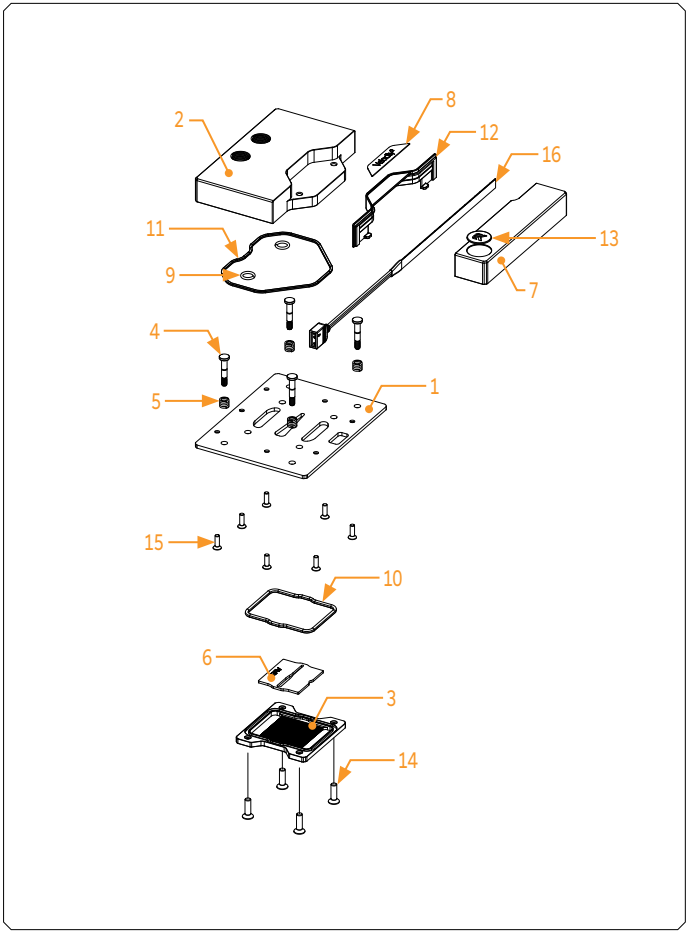

FULL NICKEL

Technical Specification:
- Dimensions: (L x H x W) - 89 x 113.5 x 34 mm
- D-RGB cable length: 50 cm
- D-RGB LED count: 16
- D-RGB connector: 3-pin 5V digital LED header (Pinout: +5V | Digital | Blocked | Ground)

Position	EAN	Description	Quantity
1	105747	Metal plate	1
2	103941	TOP plate (Nickel)	1
3	105915	Coldplate (Nickel)	1
4	/	Mounting Screw AM5	/
4.1	105668	Mounting Screw AM5 (Short)	4
4.2	106037	Mounting Screw AM5 (Long)	4
5	8706	Mounting spring AM5	4
6	105901	Jet plate	1
7	103937	Standout (Acetal)	1
8	103952	Mylar sticker	1
9	104774	OR 6 x 2 mm	2
10	104773	OR 53 x 2 mm	1
11	104772	OR 75 x 2 mm	1
12	103935	Light Guide	1
13	100663	EK - Badge	1
14	104686	Screw M4 x 14 7991DIN	4
15	8252	Screw M3 x 10 7991DIN	7
16	103007	LED Strip 500/130 mm	1

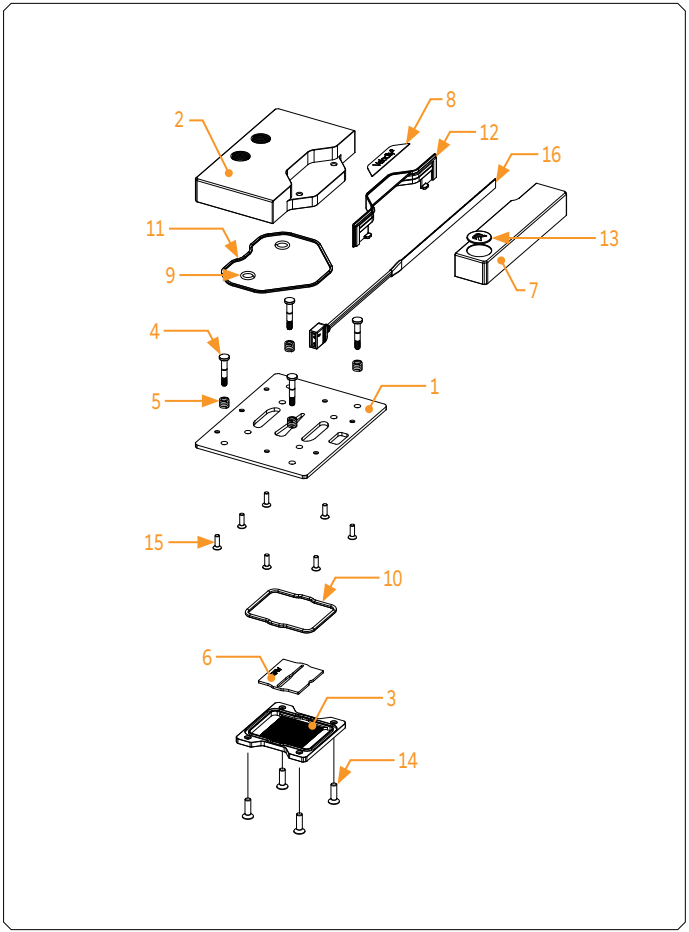

SATIN TITANIUM

Technical Specification:
- Dimensions: (L x H x W) - 89 x 113.5 x 34 mm
- D-RGB cable length: 50 cm
- D-RGB LED count: 16
- D-RGB connector: 3-pin 5V digital LED header (Pinout: +5V | Digital | Blocked | Ground)

Position	EAN	Description	Quantity
1	105747	Metal plate	1
2	104407	TOP plate (Satin T.)	1
3	105915	Coldplate (Nickel)	1
4	/	Mounting Screw AM5	/
4.1	105668	Mounting Screw AM5 (Short)	4
4.2	106037	Mounting Screw AM5 (Long)	4
5	8706	Mounting spring AM5	4
6	105901	Jet plate	1
7	103937	Standout (Acetal)	1
8	103952	Mylar sticker	1
9	104774	OR 6 x 2 mm	2
10	104773	OR 53 x 2 mm	1
11	104772	OR 75 x 2 mm	1
12	103935	Light Guide	1
13	100663	EK - Badge	1
14	104686	Screw M4 x 14 7991DIN	4
15	8252	Screw M3 x 10 7991DIN	7
16	103007	LED Strip 500/130 mm	1

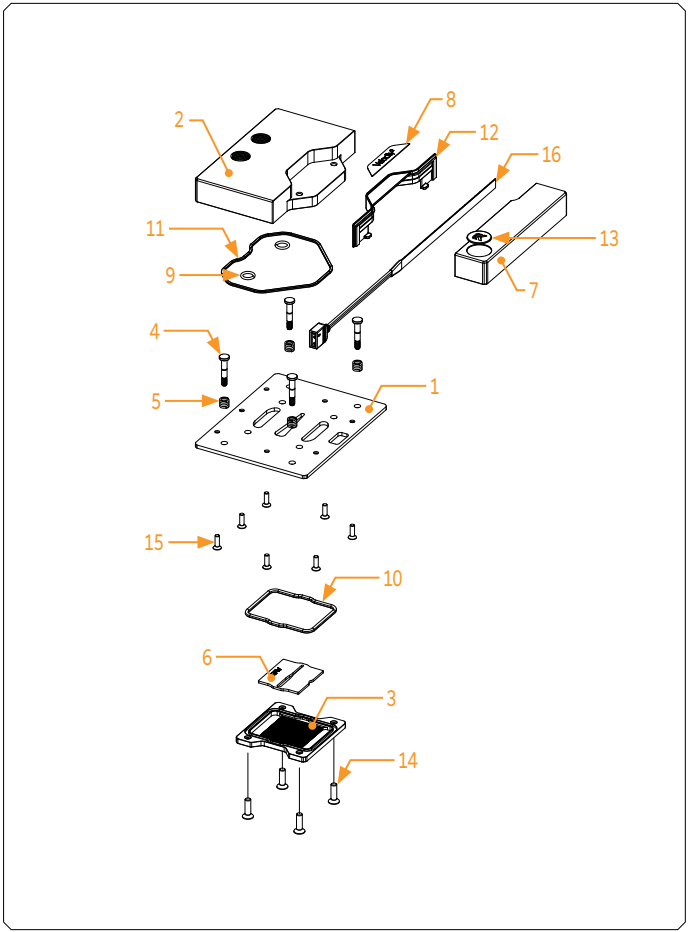

NICKEL GOLD

Technical Specification:
- Dimensions: (L x H x W) - 89 x 113.5 x 34 mm
- D-RGB cable length: 50 cm
- D-RGB LED count: 16
- D-RGB connector: 3-pin 5V digital LED header (Pinout: +5V | Digital | Blocked | Ground)

Position	EAN	Description	Quantity
1	105747	Metal plate	1
2	105054	TOP plate (Gold)	1
3	105915	Coldplate (Nickel)	1
4	/	Mounting Screw AM5	/
4.1	105668	Mounting Screw AM5 (Short)	4
4.2	106037	Mounting Screw AM5 (Long)	4
5	8706	Mounting spring AM5	4
6	105901	Jet plate	1
7	103937	Standout (Acetal)	1
8	103952	Mylar sticker	1
9	104774	OR 6 x 2 mm	2
10	104773	OR 53 x 2 mm	1
11	104772	OR 75 x 2 mm	1
12	103935	Light Guide	1
13	100663	EK - Badge	1
14	104686	Screw M4 x 14 7991DIN	4
15	8252	Screw M3 x 10 7991DIN	7
16	103007	LED Strip 500/130 mm	1

PREPARING THE MOTHERBOARD

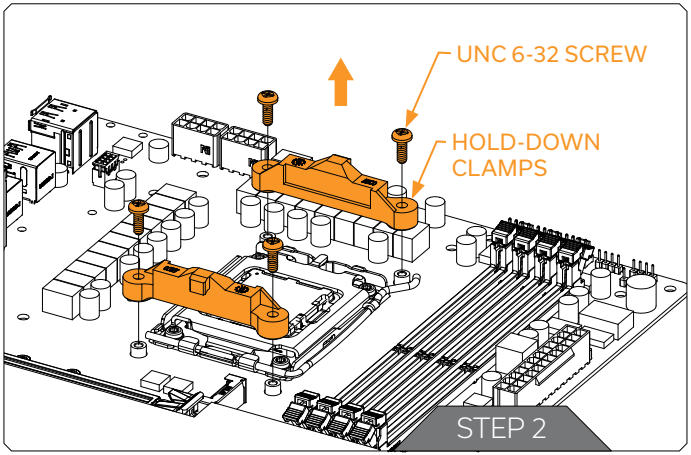

STEP 1
If already installed, please remove the motherboard from your computer and place it on an even surface.

STEP 2
Using a Philips-head screwdriver remove the four UNC 6-32 screws securing the original plastic hold-down clamps around the socket as shown in the illustration. Remove the hold-down clamps and store them away.

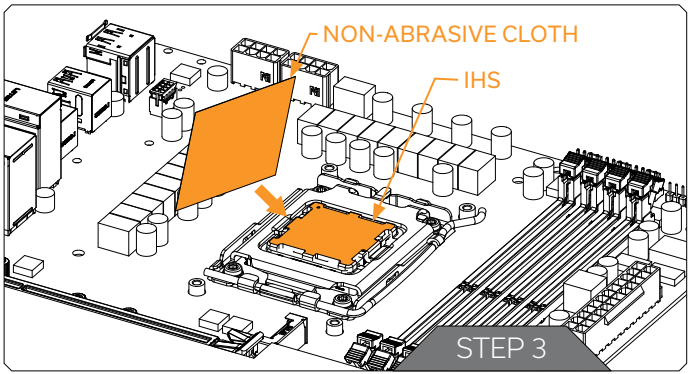

STEP 3
Cleaning the CPU: Wipe the IHS clean using a non-abrasive cloth or Q-tip as shown in the illustration.

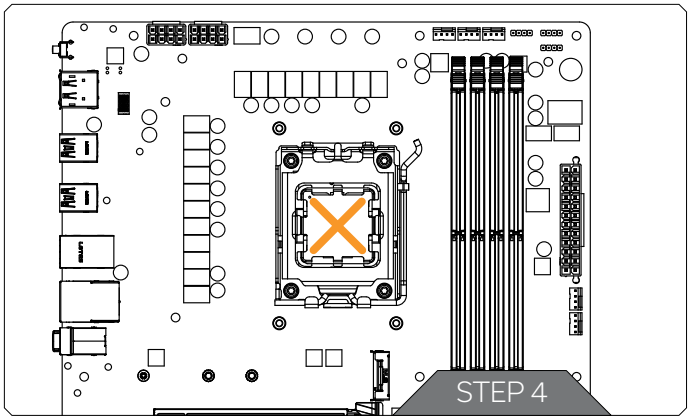

STEP 4

Applying thermal compound: Apply the enclosed thermal grease (thermal compound) on the CPU heat spreader – IHS – as shown in the image. The layer of the thermal compound must be thin and even in thickness over the entire surface of the IHS.

> ⚠ The excessive or uneven application of thermal grease may lead to poor performance!

For this step, you will need:

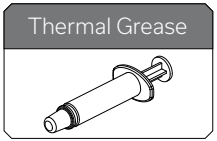

INSTALLING THE WATER BLOCK

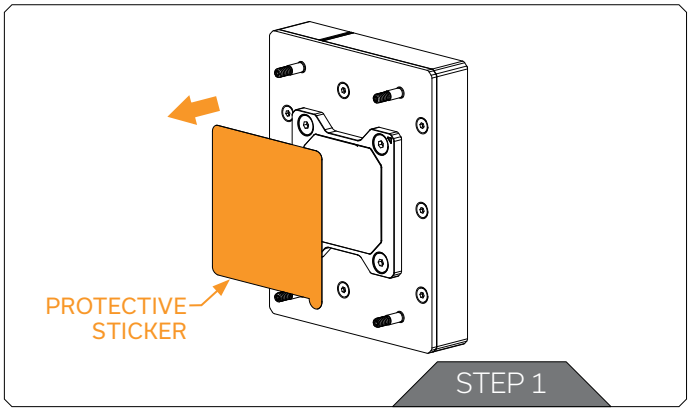

STEP 1

Before placing the water block, it is mandatory to remove the protective foil from the backside.

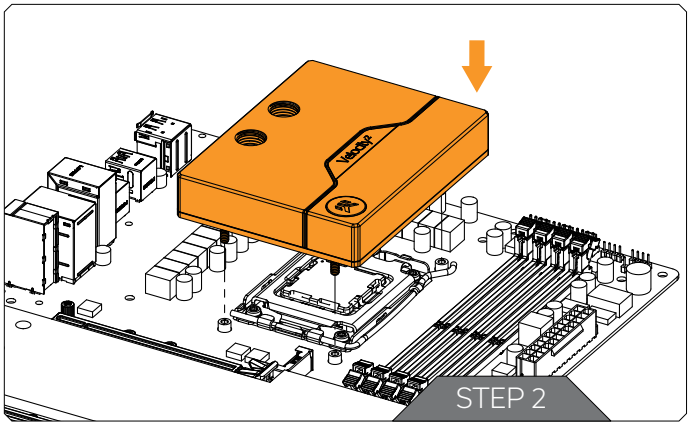

STEP 2

Position the CPU Water Block onto the Motherboard. Make sure to align the holes (as shown in the picture).

> ⚠ Before placing the water block, it is mandatory to remove the protective foil from the backside.

> ⚠ Make sure to double-check the layer of the Thermal Grease before placing the water block onto the motherboard.

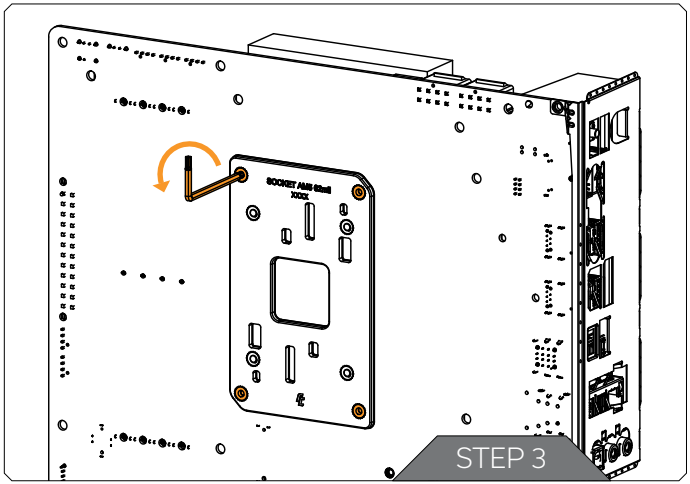

STEP 3

Secure the water block from the backside of the motherboard using the included Tx7 L-Shaped wrench.

Tighten the mounting screws in an anti-clockwise direction. Start fastening the screws in a cross pattern. Do not tighten fully until all of the screws are partially screwed in.

The Tx7 L-Shaped wrench must be used in a standing position! Otherwise, the mounting screws may crack during tightening!

For this step, you will need:

Tx7 L-Shaped wrench

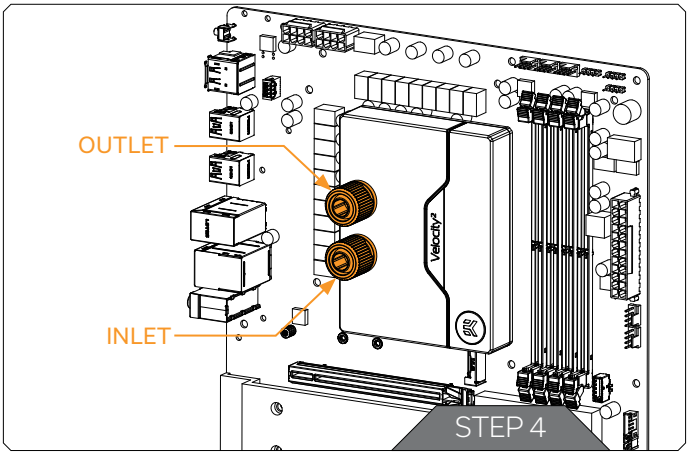

STEP 4
With EK-Velocity² series water blocks, it is mandatory to use the bottom port as the INLET.

Mixing the ports may result in poor thermal performance of the water block.

Tighten the fittings in a clockwise direction until the gasket underneath is compressed. The installation of the Velocity² water block is now complete.

CONNECTING THE D-RGB LED STRIP

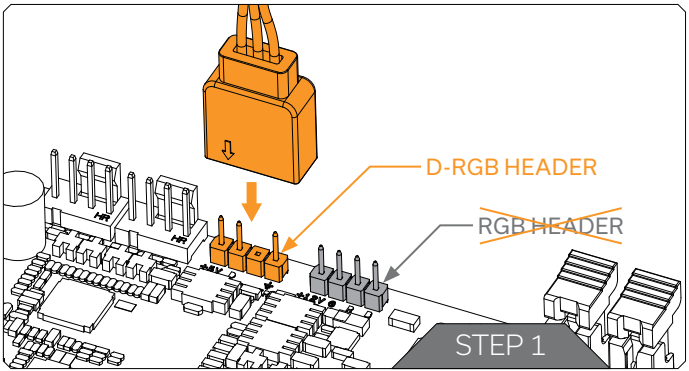

STEP 1
Plug the 3-pin connector from the water block's D-RGB LED light to the DRGB HEADER on the motherboard. The LED will work if the pin layout on the header is as follows: **+5V, Digital, empty, Ground.**

> ⚠ Please ensure that the arrow indicated on the connector is plugged into the +5V line as indicated on your motherboard. If you put the LED Diode to the 12V RGB HEADER you can damage the LEDs. Failure to do so will damage your motherboard or LED strip.

TESTING THE LOOP

To make sure the installation of EK components was successful, we recommend you perform a leak test for 24 hours. When your loop is complete and filled with coolant, connect the pump to a PSU outside of your system. Do not connect power to any of the other components. Turn on the PSU and let the pump run continuously. It is normal for the coolant level to drop during this process as air collects in the distribution plate. Inspect all parts of the loop, and in the eventuality that coolant leaks, fix the issue and repeat the testing process. Ensure that all hardware is dry before the system is powered on in order to prevent any damage.

WARRANTY

Our products are warranted against defects of materials and quality for a period of 24 months, starting with the date of delivery to the end-user. During this period, products will be repaired or have parts replaced at our discretion, provided that 1) the product is returned to the agent from whom it was purchased; 2) the product has been purchased by the end-user and has not been used for commercial purposes; 3) the product has not been misused, handled carelessly, or used in a manner other than the way described in the instructions manual. This warranty does not confer rights other than those expressly set out above and does not cover any claims for consequential loss or damage. This warranty is offered as an extra benefit and does not affect your statutory rights as a consumer. This warranty is voided if the product comes in contact with aggressive UV additives or other improper liquids. EK water blocks are sealed with a warranty-voiding circular label, proving the water block has withstood a pressure leak test. Removing the label will void the leak-free guarantee, but not the guarantee on the product itself. Any other RMA issues can be reported to EK Customer Support at **www.ekwb.com/support** for further analysis.

SUPPORT AND SERVICE

In case you need assistance or wish to order spare parts or a new mounting mechanism, please contact:
https://www.ekwb.com/customer-support/

For spare parts orders, refer to the page with "TECHNICAL SPECIFICATIONS AND WATER BLOCK PARTS" where you can find the EAN number of each part you might need.

Include the EAN number with quantity in your request. Mounting Mechanism EAN can be found under "BOX CONTENTS"

Thermal pads are readily available in the EK shop

SOCIAL MEDIA

EKWaterBlocks

@EKWaterBlocks

ekwaterblocks

EKWBofficial

ekwaterblocks