EK-Quantum Velocity² D-RGB AM4

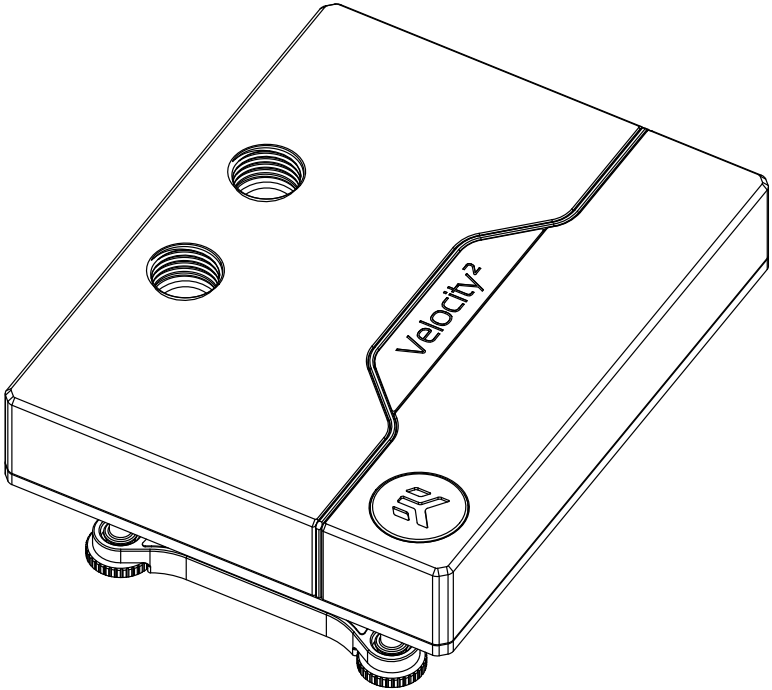

USER GUIDE

This product is intended for installation only by expert users. Please consult with a qualified technician for installation. Improper installation may result in damage to your equipment. EK Water Blocks assumes no liability whatsoever, expressed or implied, for the use of these products, nor their installation. The following instructions are subject to change without notice. Please visit our website at www.ekwb.com for updates. Before installation of this product, please read important notice, disclosure, and warranty conditions that are printed on the back of the box.

Before you start using this product, please follow these basic guidelines:

Please carefully read the manual before beginning the installation process.

The EK Fittings require only a small amount of force to screw them firmly in place since the liquid seal is ensured by the rubber O-ring gaskets.

The use of corrosion inhibiting coolants is always recommended for liquid cooling systems, and mandatory for nickel plated water blocks.

Do not use pure distilled water! For best results EK recommends the use of EK-Cryo Fuel coolants.

Make sure to thoroughly bleed air out of your water block, or you will not reach optimal performance.

TABLE OF CONTENTS

GENERAL INFORMATION ON WATER BLOCK COMPATIBILITY **4**
BOX CONTENTS **4**
WATER BLOCK DIMENSIONS **5**
TECHNICAL SPECIFICATIONS AND WATER BLOCK PARTS **6**
NICKEL PLEXI 6
NICKEL ACETAL 7
COPPER ACETAL 8
FULL NICKEL 9
SATIN TITANIUM 10
PREPARING THE MOTHERBOARD **11**
INSTALLING THE WATER BLOCK **12**
CONNECTING THE D-RGB LED STRIP **15**
SUPPORT AND SERVICE **16**
SOCIAL MEDIA **16**

GENERAL INFORMATION ON WATER BLOCK COMPATIBILITY

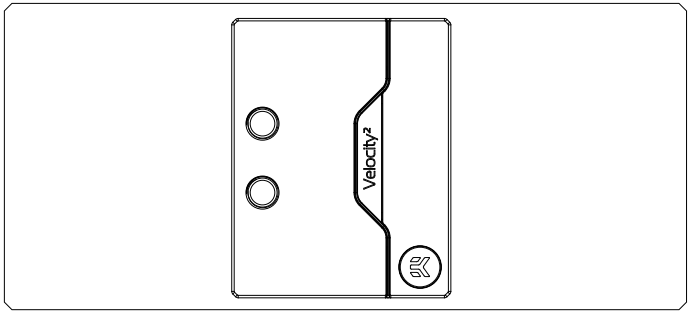

This CPU liquid cooling unit is pre-assembled for use with modern AMD desktop socket type motherboards. By default (out of the box) this water block supports the following CPU sockets:

- AMD® socket AMx and FMx

BOX CONTENTS

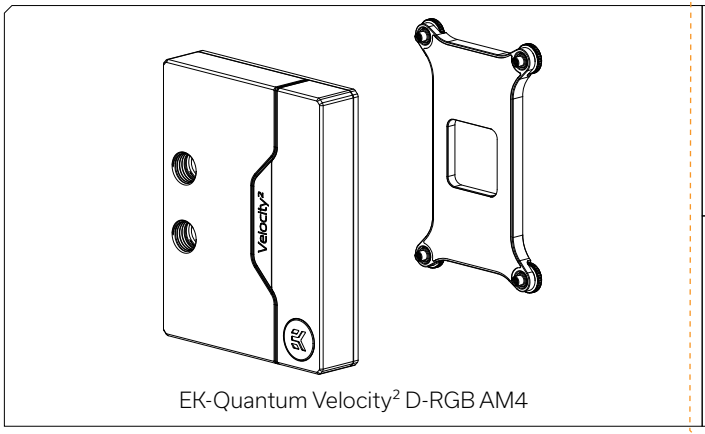

EK-Quantum Velocity² D-RGB AM4

Mounting Mechanism – You may not need all the screws, mounting mechanism is universal!

Allen Key 2 mm (1 pc)

Allen Key 2.5 mm (1 pc)

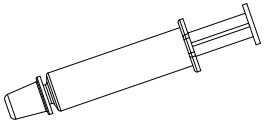

Thermal grease (1 pc)

WATER BLOCK DIMENSIONS

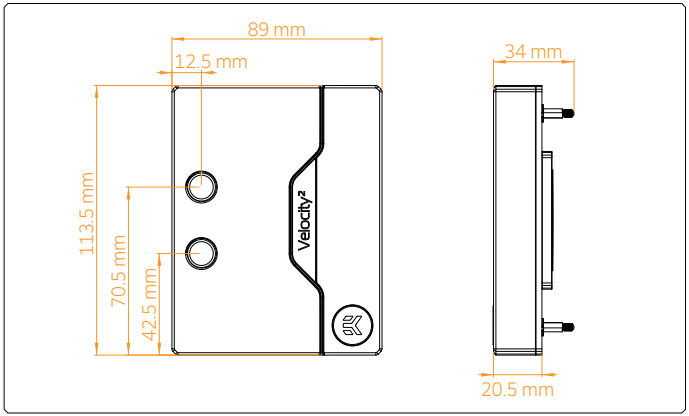

CPU WB

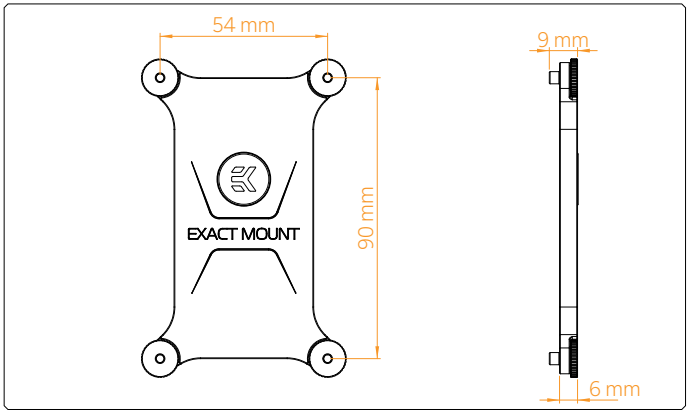

Backplate

TECHNICAL SPECIFICATIONS AND WATER BLOCK PARTS

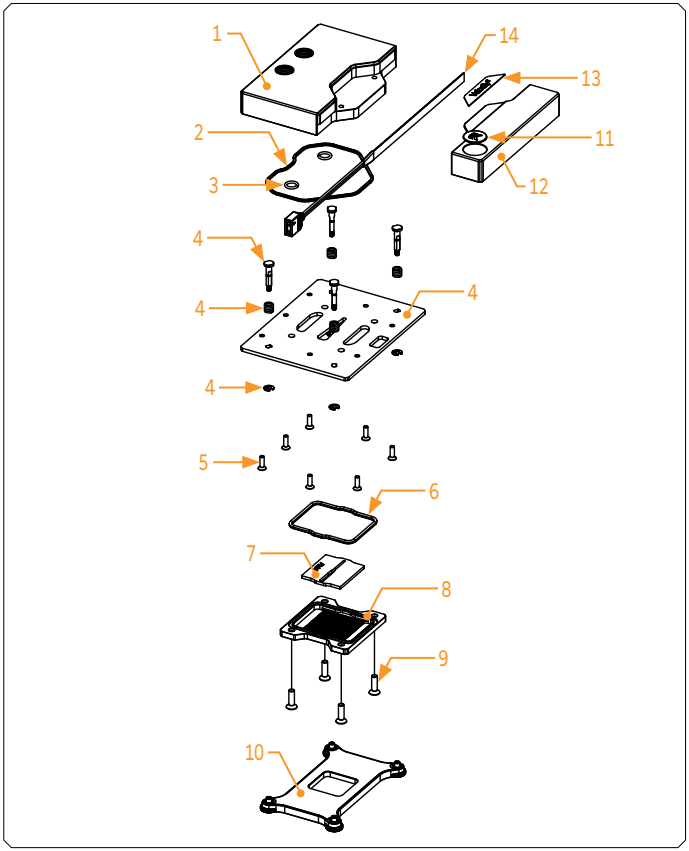

NICKEL PLEXI

Technical Specification:
Dimensions (L x H x W): 98.5 x 113.5 x 34 mm
D-RGB cable length: 500 mm
D-RGB LED count: 16
D-RGB connector standard 3-pin (+5V, Data, Blocked, Ground)

Position	EAN	Description	Quantity
1	103938	Top plate (Plexi)	1
2	104772	O-Ring 1/3	1
3	104774	O-Ring 3/3	2
4	104736	Metal plate Assembly	1
5	8252	M3x10 DIN7991 Screw	7
6	104773	O-Ring 2/3	1
7	103933	Jet plate	1
8	103912	Coldplate (Nickel)	1
9	104686	M4x14 DIN7991 Screw	4
10	104734	AM4 Backplate	1
11	100663	EK-Badge	1
12	103936	Standout (Acetal)	1
13	103952	Mylar Sticker	1
14	103007	LED Strip	1

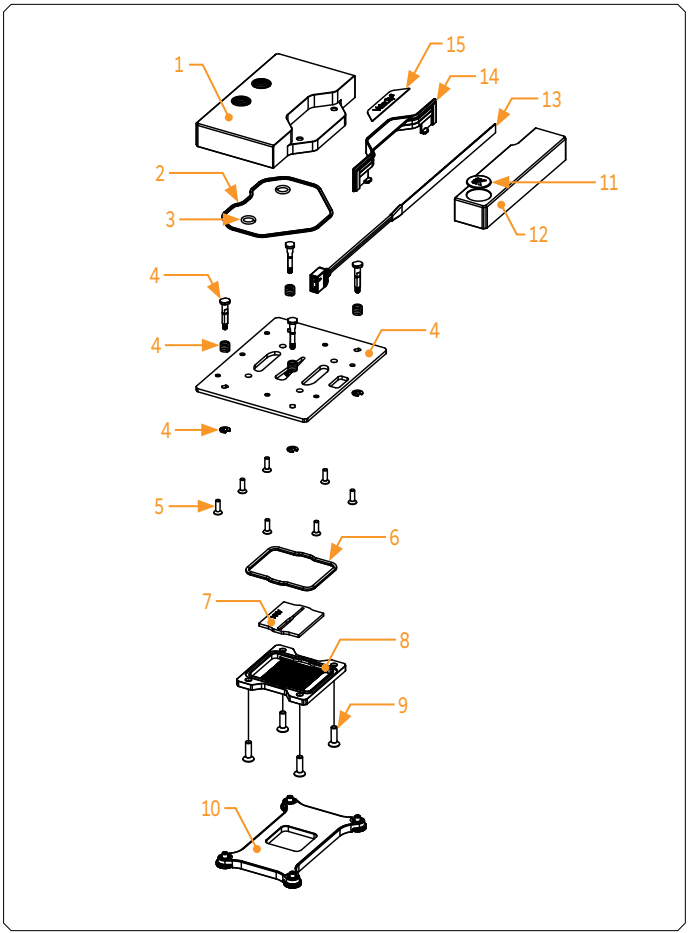

NICKEL ACETAL

Position	EAN	Description	Quantity
1	103939	Top plate (Acetal)	1
2	104772	O-Ring 1/3	1
3	104774	O-Ring 3/3	2
4	104736	Metal plate Assembly	1
5	8252	M3x10 DIN7991 Screw	7
6	104773	O-Ring 2/3	1
7	103933	Jet plate	1
8	103912	Coldplate (Nickel)	1
9	104686	M4x14 DIN7991 Screw	4
10	104734	AM4 Backplate	1
11	100663	EK-Badge	1
12	103937	Standout (Acetal)	1
13	103007	LED Strip	1
14	103935	Light Guide	1
15	103952	Mylar Sticker	1

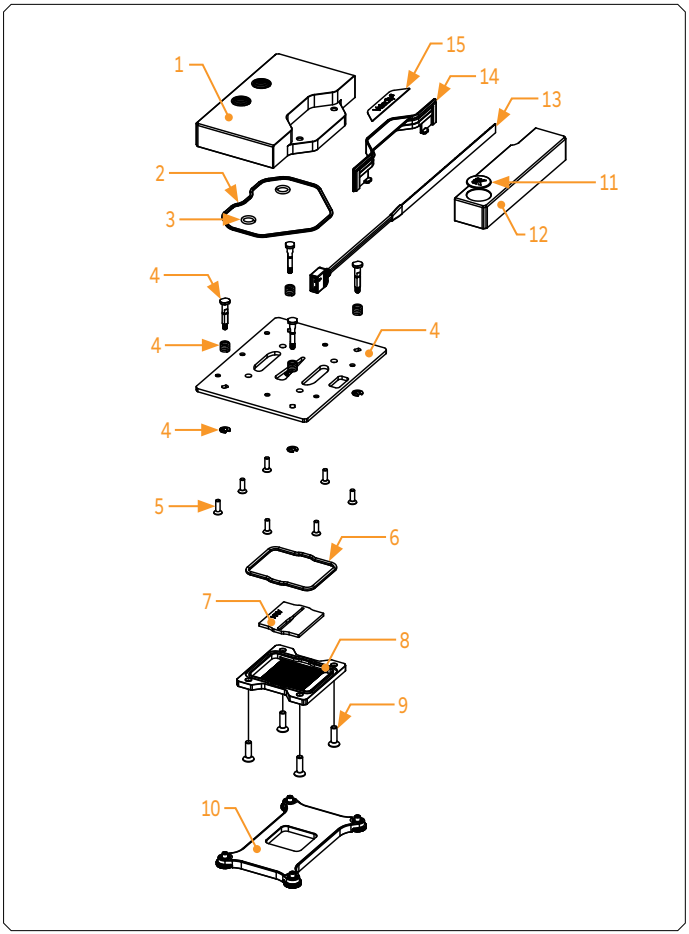

COPPER ACETAL

Position	EAN	Description	Quantity
1	103939	Top plate (Acetal)	1
2	104772	O-Ring 1/3	1
3	104774	O-Ring 3/3	2
4	104736	Metal plate Assembly	1
5	8252	M3x10 DIN7991 Screw	7
6	104773	O-Ring 2/3	1
7	103933	Jet plate	1
8	103911	Coldplate	1
9	8207	M4x14 DIN7991 Screw	4
10	104734	AM4 Backplate	1
11	100663	EK-Badge	1
12	103937	Standout (Acetal)	1
13	103007	LED Strip	1
14	103935	Light Guide	1
15	103952	Mylar Sticker	1

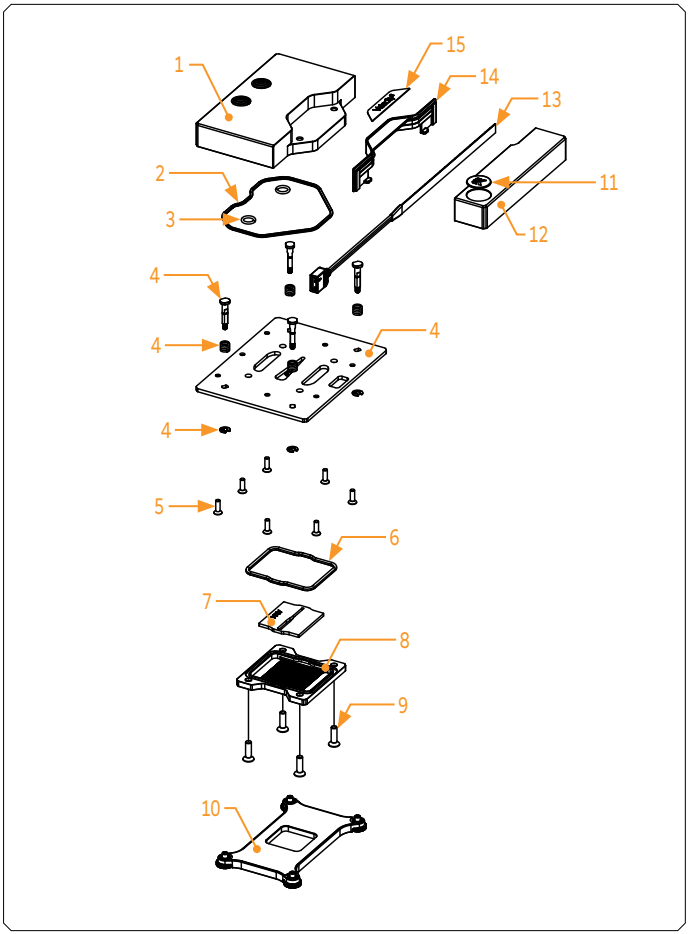

FULL NICKEL

Position	EAN	Description	Quantity
1	103941	Top plate (Brass)	1
2	104772	O-Ring 1/3	1
3	104774	O-Ring 3/3	2
4	104736	Metal plate Assembly	1
5	8252	M3x10 DIN7991 Screw	7
6	104773	O-Ring 2/3	1
7	103933	Jet plate	1
8	103912	Coldplate (Nickel)	1
9	104686	M4x14 DIN7991 Screw	4
10	104734	AM4 Backplate	1
11	100663	EK-Badge	1
12	103937	Standout (Acetal)	1
13	103007	LED Strip	1
14	103935	Light Guide	1
15	103952	Mylar Sticker	1

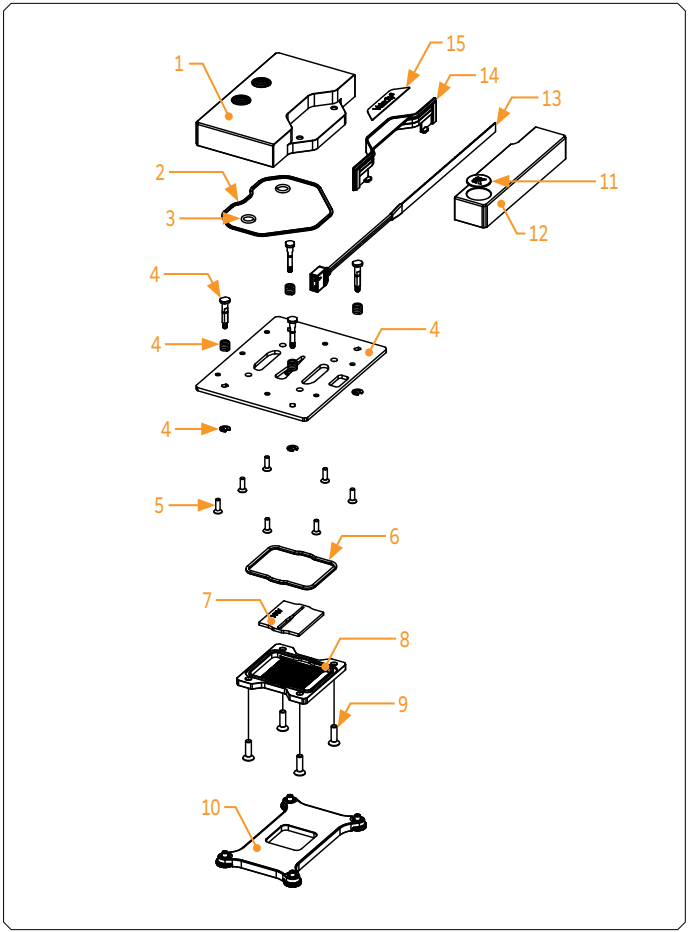

SATIN TITANIUM

Position	EAN	Description	Quantity
1	103407	Top plate (Satin Ti.)	1
2	104772	O-Ring 1/3	1
3	104774	O-Ring 3/3	2
4	104736	Metal plate Assembly	1
5	8252	M3x10 DIN7991 Screw	7
6	104773	O-Ring 2/3	1
7	103933	Jet plate	1
8	103912	Coldplate (Nickel)	1
9	104686	M4x14 DIN7991 Screw	4
10	104734	AM4 Backplate	1
11	100663	EK-Badge	1
12	103937	Standout (Acetal)	1
13	103007	LED Strip	1
14	103935	Light Guide	1
15	103952	Mylar Sticker	1

PREPARING THE MOTHERBOARD

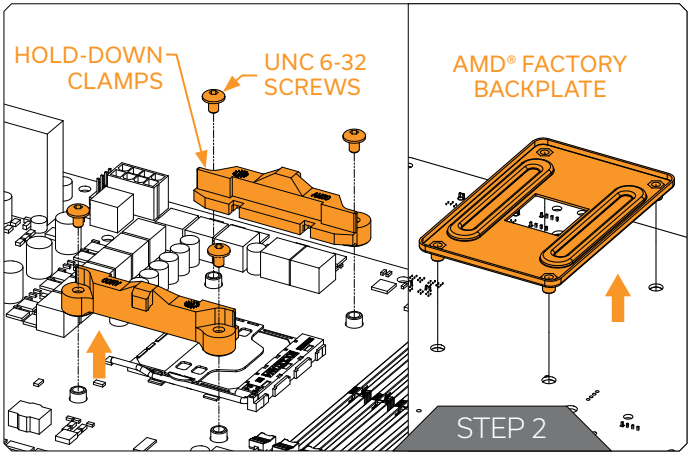

STEP 1
If already installed, please remove the motherboard from your computer and place it on an even surface.

STEP 2
Using Philips-head screwdriver remove the four UNC 6-32 screws securing the original plastic hold-down clamps around the socket as shown on the illustration. Remove the original AMD® backplate and the hold-down clamps and store them away.

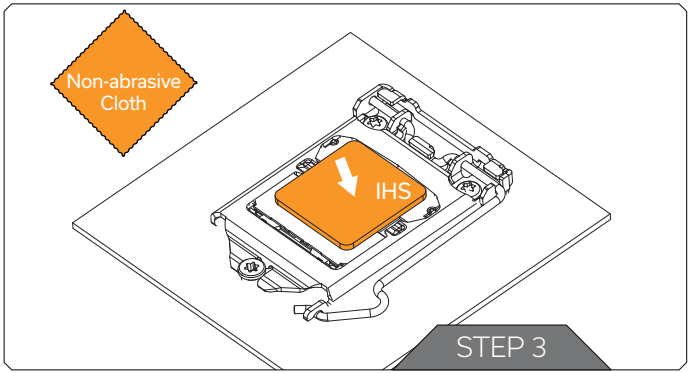

STEP 3
Cleaning the CPU: Wipe the IHS clean using a non-abrasive cloth or Q-tip as shown in the illustration.

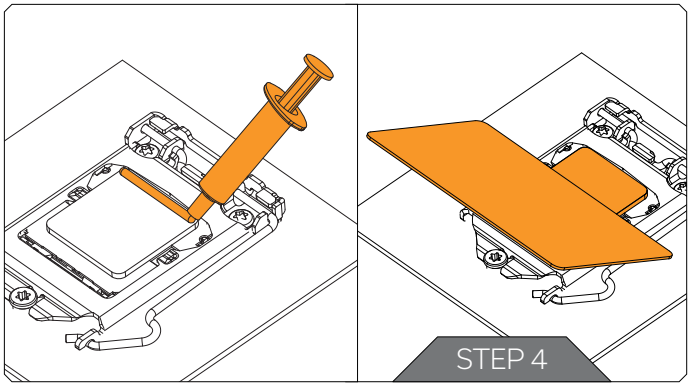

STEP 4

Applying thermal compound: Once clean, apply a line of Thermal Compound on one edge of the IHS and use a credit card or similar to spread it evenly.

The layer of Thermal Compound must be thin and even in thickness over the entire surface of the IHS. Excessive or irregular application may lead to poor performance. This method works for Thermal Grizzly Hydronaut Thermal Compound as supplied with all Velocity2 CPU Water Blocks.

INSTALLING THE WATER BLOCK

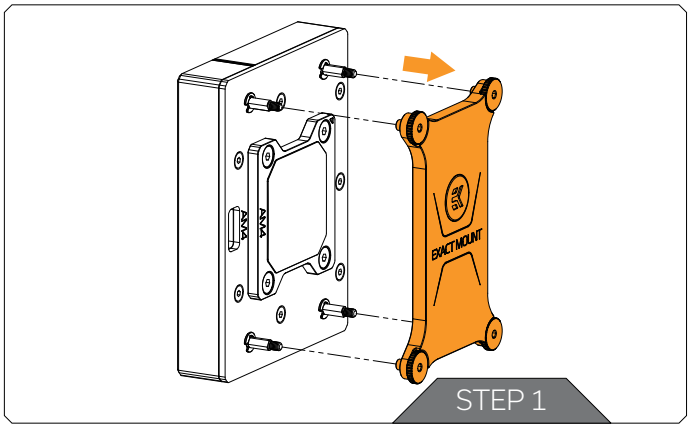

STEP 1

Unscrew the pre-installed backplate from the backside of the CPU using an Allen Key 2.5 mm and save it for the later steps.

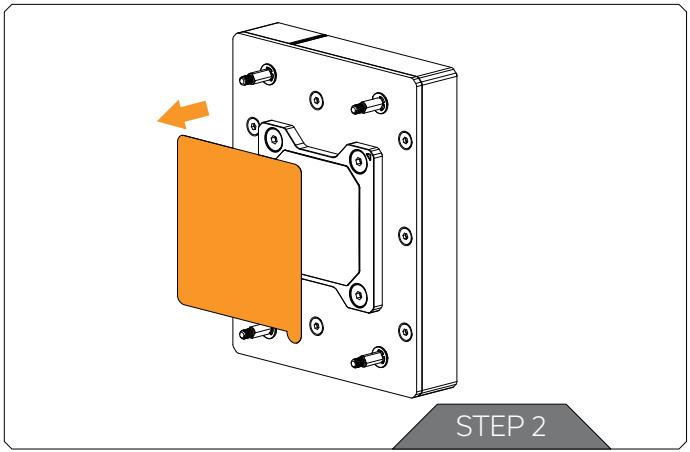

STEP 2
Before placing the water block, it is mandatory to remove the protective foil from the backside.

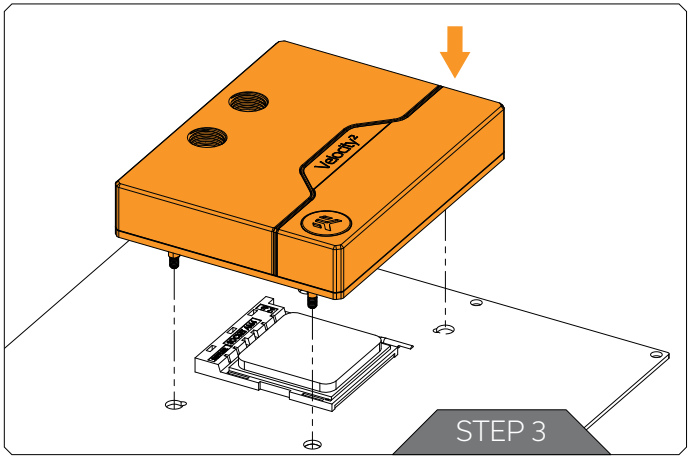

STEP 3
Position the CPU Water Block onto the Motherboard. Make sure to align the holes (as shown in the picture).

> ⚠ Before placing the water block, it is mandatory to remove the protective foil from the backside.

> ⚠ Make sure to double check the layer of the Thermal Grease before placing the water block onto the motherboard.

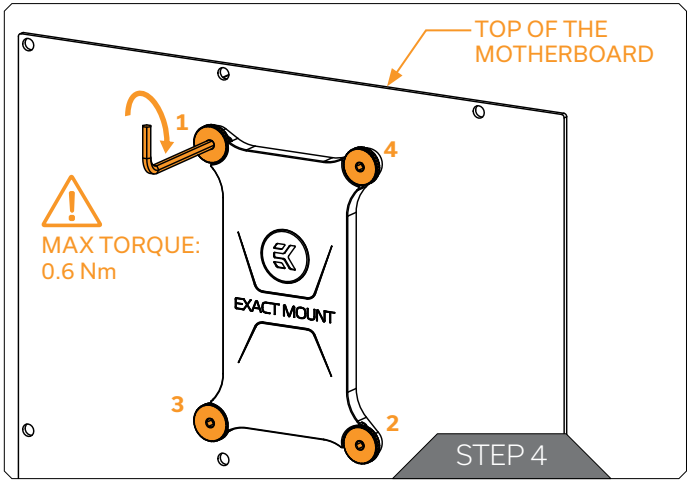

STEP 4

After placing the water block, the stored backplate must be attached on the backside of the motherboard using Allen Key 2.5 mm (shown in the picture).

Start fastening the backplate, preferably in a cross pattern. Do not tighten fully until all of the nuts are partially screwed in. The Allen Key 2.5mm must be used in a standing position! Otherwise, the mounting screws may crack during tightening!

EK recommends using the EK-Loop Torque Screwdriver - 0.6Nm :
https://www.ekwb.com/shop/ek-loop-torque-screwdriver-0-6nm

> ⚠ Make sure to orientate the backplate as illustrated. Incorrect installation of the backplate may result in damage to the motherboard.

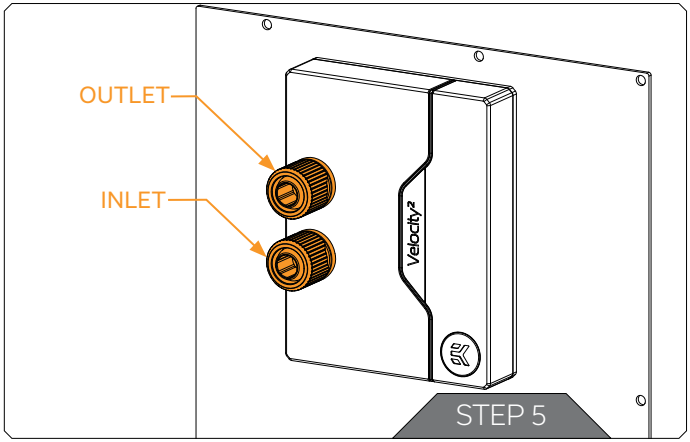

STEP 5

With EK-Velocity² series water blocks, it is mandatory to use the bottom port as the **INLET**. Mixing the ports may result in poor thermal performance of the water block.

Tighten the fittings in clockwise direction until the gasket underneath is compressed.

The installation of the Velocity² water block is now complete.

CONNECTING THE D-RGB LED STRIP

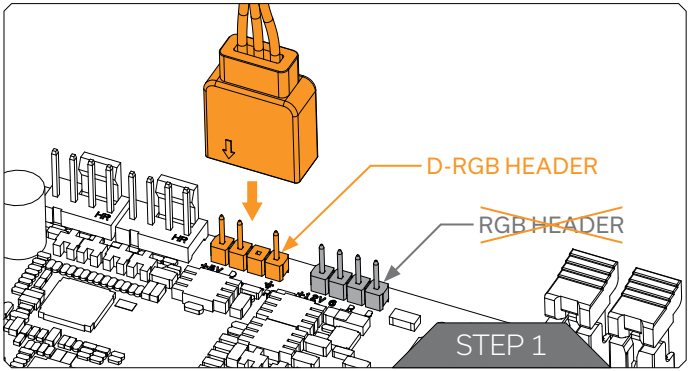

STEP 1

Plug the 3-pin connector from the water block's D-RGB LED light to the DRGB HEADER on the motherboard. The LED will work if the pin layout on the header is as follows: **+5V, Digital, empty, Ground.**

Please ensure that the arrow indicated on the connector is plugged into the +5V line as indicated on your motherboard. If you put the LED Diode to the 12V RGB HEADER you can damage the LEDs. Failure to do so will damage your motherboard or LED strip.

SUPPORT AND SERVICE

In case you need assistance or wish to order spare parts or a new mounting mechanism, please contact:
https://www.ekwb.com/customer-support/

For spare parts orders, refer to the page with "TECHNICAL SPECIFICATIONS AND WATER BLOCK PARTS" where you can find the EAN number of each part you might need.

Include the EAN number with quantity in your request. Mounting Mechanism EAN can be found under "BOX CONTENTS"

Thermal pads are readily available in the EK shop

SOCIAL MEDIA

EKWaterBlocks

@EKWaterBlocks

ekwaterblocks

EKWBofficial

ekwaterblocks