EK-Quantum Convection DDC

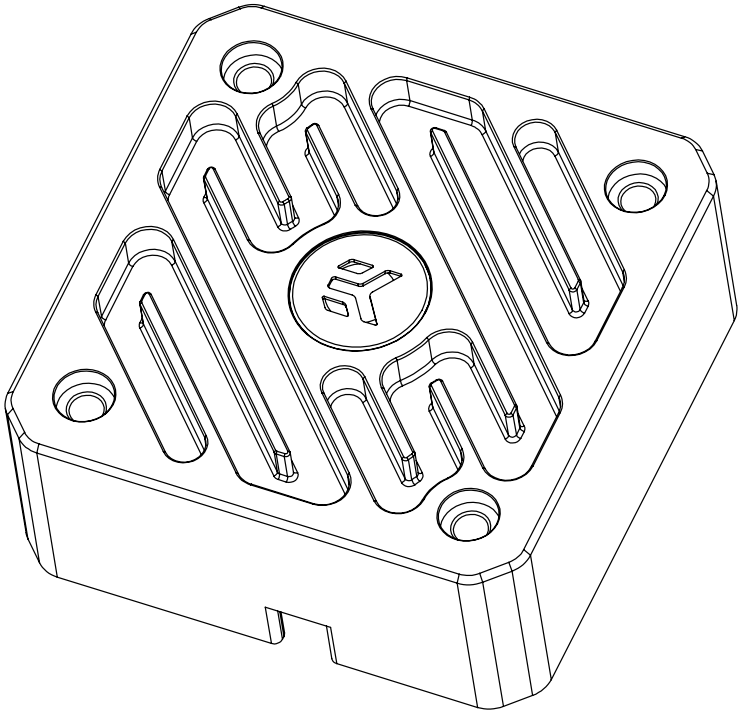

USER GUIDE

This product is intended for installation only by expert users. Please consult with a qualified technician for installation. Improper installation may result in damage to your equipment. EK Water Blocks assumes no liability whatsoever, expressed or implied, for the use of these products, nor their installation. The following instructions are subject to change without notice. Please visit our web site at www.ekwb.com for updates. Before installation of this product please read important notice, disclosure and warranty conditions printed on the back of the box.

Before you start using this product, please follow these basic guidelines:

Carefully read the manual before beginning with the installation process.

TABLE OF CONTENTS

BOX CONTENTS 4
DDC COVER DIMENSIONS 5
MAIN PARTS 6
PREPARING THE DDC PUMP 7
INSTALLING THE EK-QUANTUM CONVECTION DDC 8
SUPPORT AND SERVICE 10
SOCIAL MEDIA 10

BOX CONTENTS

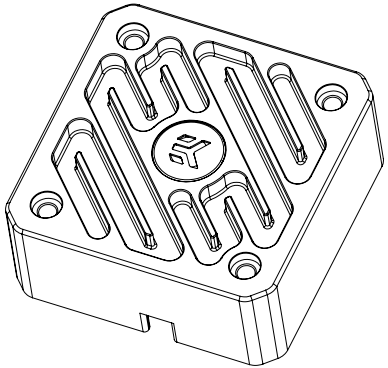

EK-Quantum Convection DDC

Mounting Mechanism – You may not need all the screws, mounting mechanism is universal!

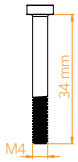

MS - FLT DDC Cover Screw M4x34 (4 pcs)

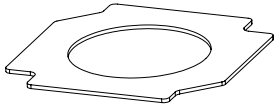

Pre-cut DDC thermal pad

Allen Key 2.5 mm (1 pc)

Allen Key 2 mm (1 pc)

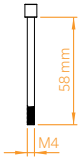

Dumper Kinetic DDC M4x59 Screw (4 pcs)

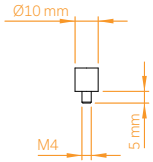

M4 – Pump Top Mount Dumper

DDC COVER DIMENSIONS

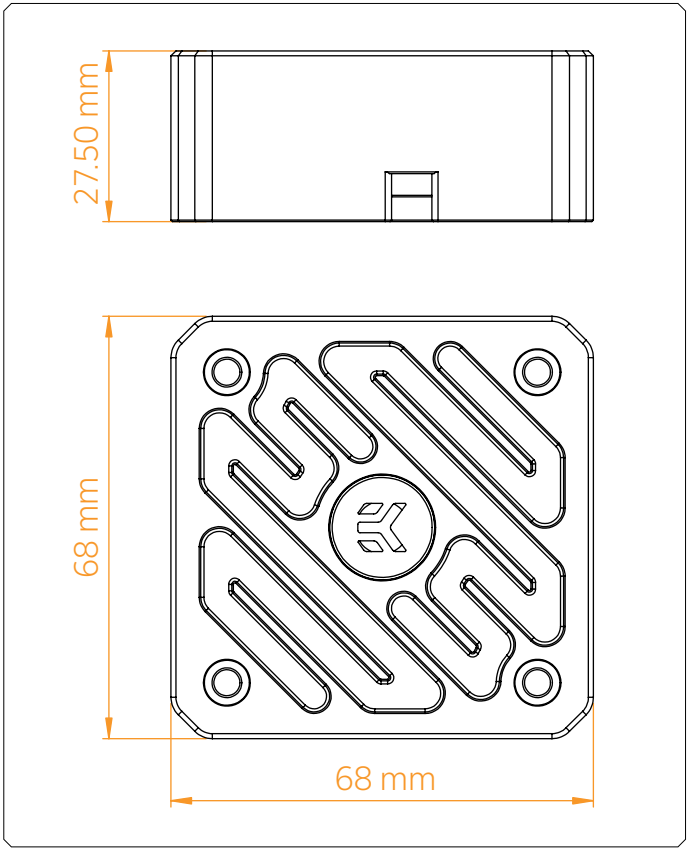

MAIN PARTS

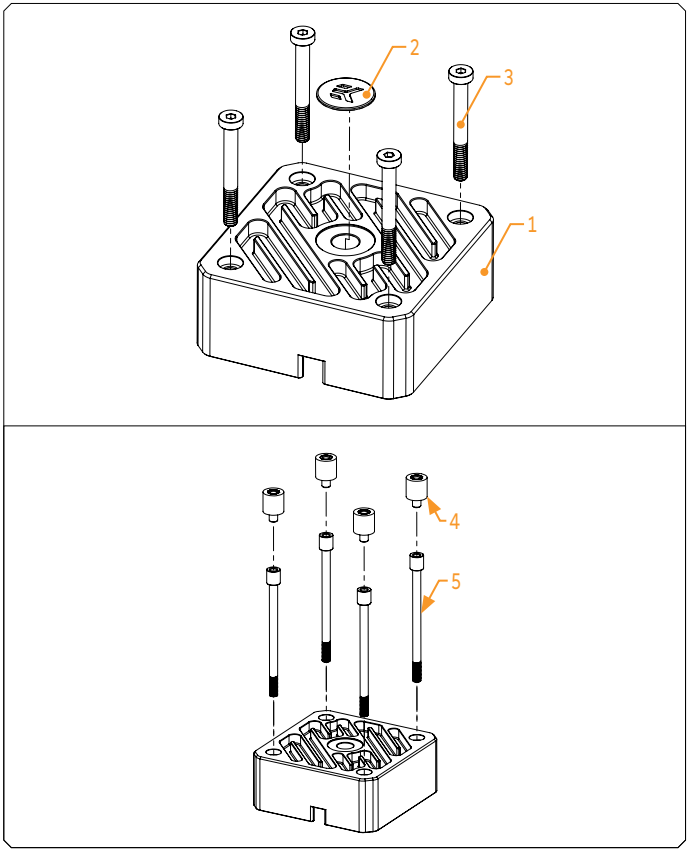

Position	EAN	Description
1	103328	ALU - FLT DDC Cover (Black Elox)
	103327	ALU - FLT DDC Cover (Nickel)
	103570	ALU - FLT DDC Cover (Natur Elox)
	105059	ALU - FLT DDC Cover (Gold)
2	100663	EK RGB Badge
3	103331	MS - FLT DDC Cover Screw M4 x 34 (Black Chrome)
	103330	MS - FLT DDC Cover Screw M4 x 34 (Nickel)
	105359	FLT DDC Cover Screw M4 x 34 (Gold)
4	8628	Blažilnik M4 - Pump Top Mount (V2)
5	103578	Kinetic DDC M4 x 59 Screw (Black Chrome)
	103577	Kinetic DDC M4 x 59 Screw (Nickel)
	105361	Kinetic DDC M4 x 59 Screw (Gold)

PREPARING THE DDC PUMP

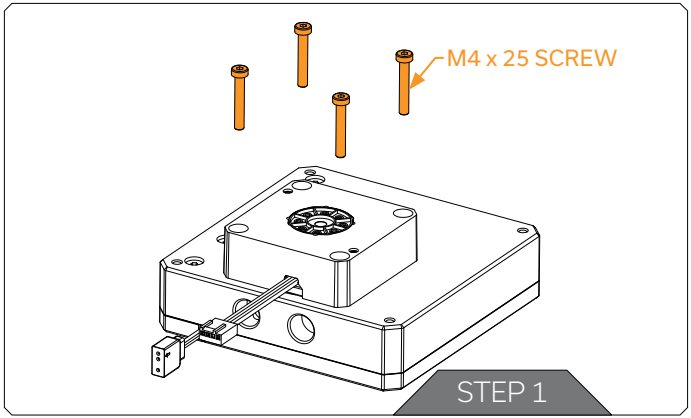

STEP 1
Remove the original four (4) M4 x 25 screws of the DDC pump so that the original cover can be removed from the assembly.

> ⚠ If the reservoir is already filled with coolant, drain it before EK-Quantum Convection cover installation.

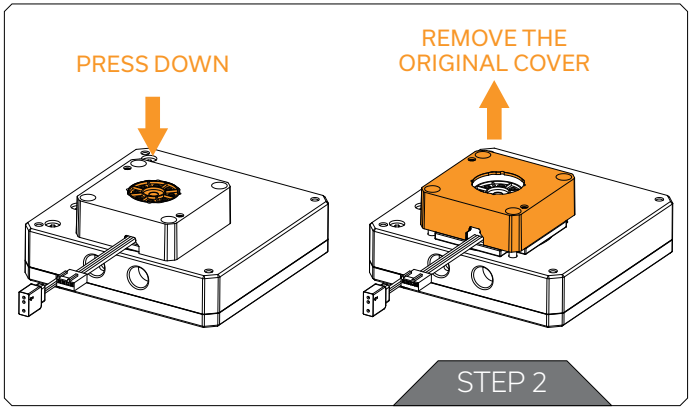

STEP 2
Then to remove the original pump cover, we recommend holding the pump onto the reservoir by pressing the pattern in the middle. Then, while pressing the pump onto the reservoir, remove the original cover of the pump. If by accident the whole DDC pump is removed or detached, please make sure that the O-ring seals are still properly mounted. Any misplaced O-ring seal will cause coolant leakage!

If you are using EK-DDC Heatsink Housing, care for the thermal pad between the DDC pump and the housing!

INSTALLING THE EK-QUANTUM CONVECTION DDC

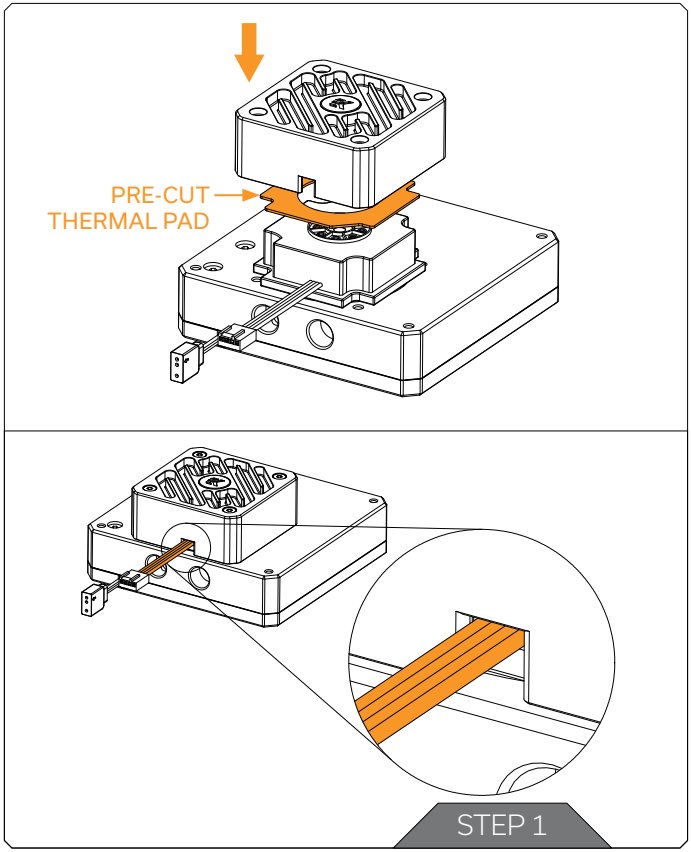

STEP 1

EK has supplied you with additional pre-cut thermal pad. Place the pre-cut thermal pad on the DDC pump by aligning the shape of the pad to the DDC pump's PCB.

Then place the EK-Quantum Convection DDC onto the DDC pump. Be careful to rotate the ALU Cover so that the cables of the pump are placed properly.

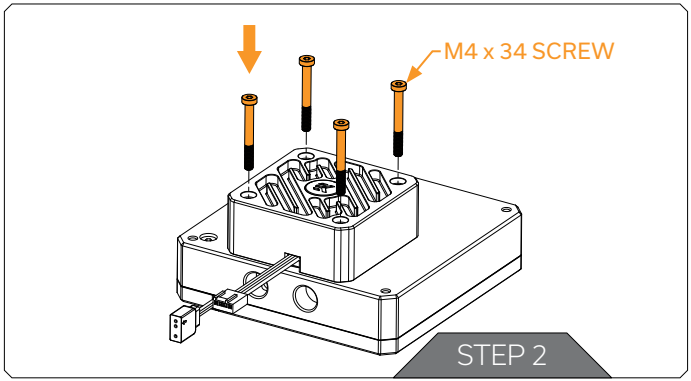

STEP 2
Place the four (4) custom made M4 x 34 screws in their holes and secure them with provided 2.5 mm Allen key. Do not use excessive force while tightening the screws!

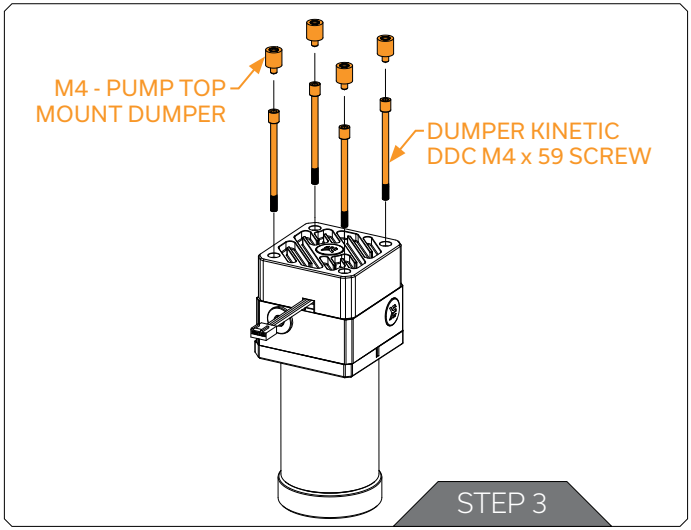

STEP 3
Following the same instructions for removing the original cover of the DDC pump from the EK-Quantum Kinetic TBE DDC Series. Then use the supplied 2 mm Allen Key for tightening four (4) Dumper Kinetic DDC M4 x 59 Screws. Do not use excessive force while tightening the screws! EK has also supplied you with four (4) vibration absorbing M4 - Pump Top Mount Dumpers that can be tightened on the M4 x 59 screws as shown on the picture.

SUPPORT AND SERVICE

In case you need assistance or wish to order spare parts or a new mounting mechanism, please contact:
https://www.ekwb.com/customer-support/

For spare parts orders, refer to the page with "MAIN PARTS" where you can find the EAN number of each part you might need.

Include the EAN number with quantity in your request. Mounting Mechanism EAN can be found under "BOX CONTENTS"

Thermal pads are readily available in the EK shop

SOCIAL MEDIA

EKWaterBlocks

@EKWaterBlocks

ekwaterblocks

EKWBofficial

ekwaterblocks