EK-Quantum
Surface Radiator Setup Configurations

RADIATOR

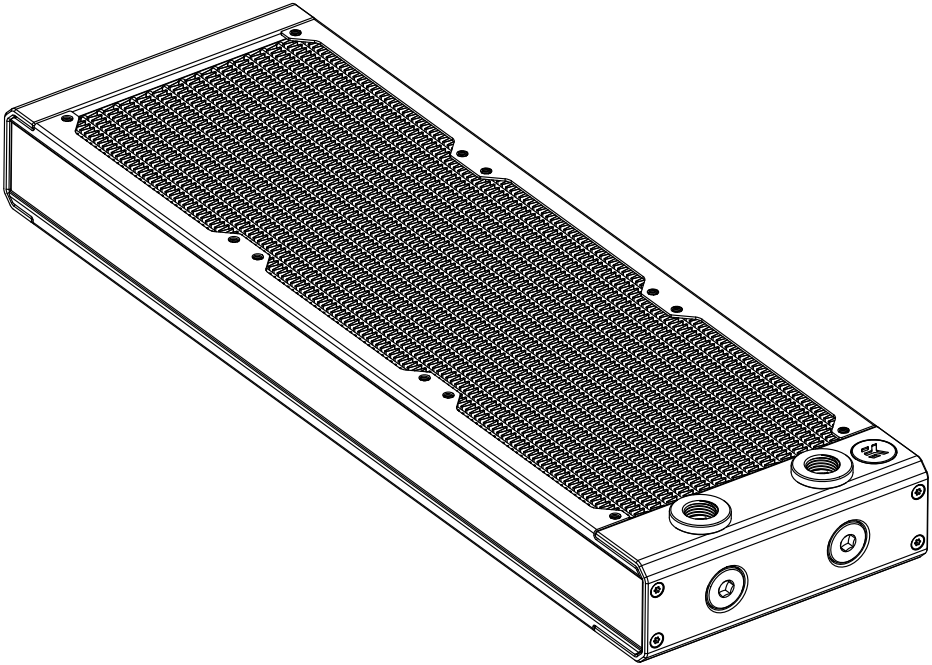

USER GUIDE

Please note the installation of the product is intended to be undertaken by an adequately trained and experienced person. You are installing the product at your own risk. If you are not properly trained or experienced or feel unsure about the installation procedure, please refrain from installing the product yourself and contact our tech support for assistance. We disclaim our liability for any damages to the product as well as incidental, consequential, or indirect damages incurred due to improper or inappropriate installation.

Before you start using this product, please follow these basic guidelines:

Carefully read the manual before beginning with the installation process.

EK Fittings require only a small amount of force to screw them firmly in place since the liquid seal is ensured with the rubber O-ring gaskets.

The use of quality market-proven corrosion-inhibiting coolants is always strongly recommended for any liquid cooling system.

Do not use pure distilled water as a cooling liquid! For best results, EK recommends the use of EK-CryoFuel Coolants.

TABLE OF CONTENTS

EK-QUANTUM SURFACE RADIATORS 4
EXPLODED VIEW OF THE REMOVABLE COMPONENTS FOR S, P AND X SERIES 6
EK-QUANTUM SURFACE S SERIES 6
EK-QUANTUM SURFACE P SERIES 7
EK-QUANTUM SURFACE X SERIES 8
SUPPORT AND SERVICE 9
SOCIAL MEDIA 9

EK-QUANTUM SURFACE RADIATORS

EK-Quantum Surface Radiators have a classical U-shape coolant flow, with inlet and outlet both on one side of the radiator. However, you can still choose which port of the radiator will serve as an inlet, and which for the outlet in your custom loop.

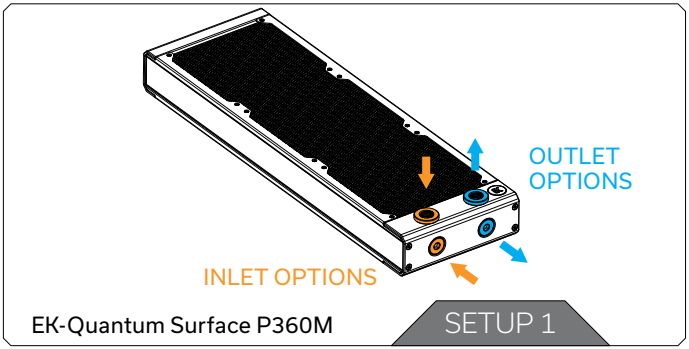

SETUP 1

Picture on the left shows the first flow direction setup of the EK-Quantum Surface P360M Radiator which is a Multiport radiator. On the non-multiport radiator you can choose only one inlet and one outlet port.

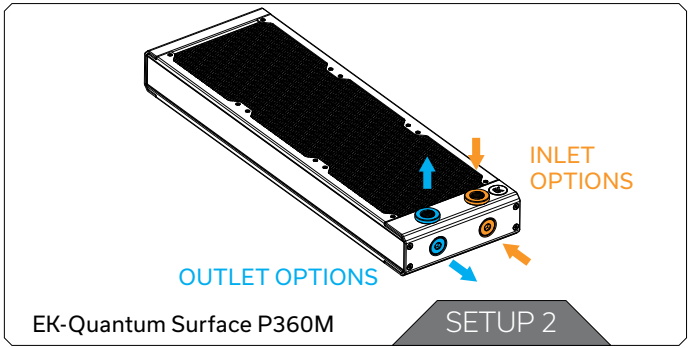

SETUP 2

Picture on the left shows the second flow direction setup of the EK-Quantum Surface P360M Radiator which is a Multiport Radiator. On the non-multiport radiator you can choose only one inlet and one outlet port.

EK recommends using the same number of inlets and outlets for the most optimal performance!

It is mandatory to use the extenders on any inlet and outlet position!

If transferred from the stock position of the radiator to another, check if the extenders are tightened to avoid leakage!

The same port setup applies for all EK-Quantum Surface radiator variants!

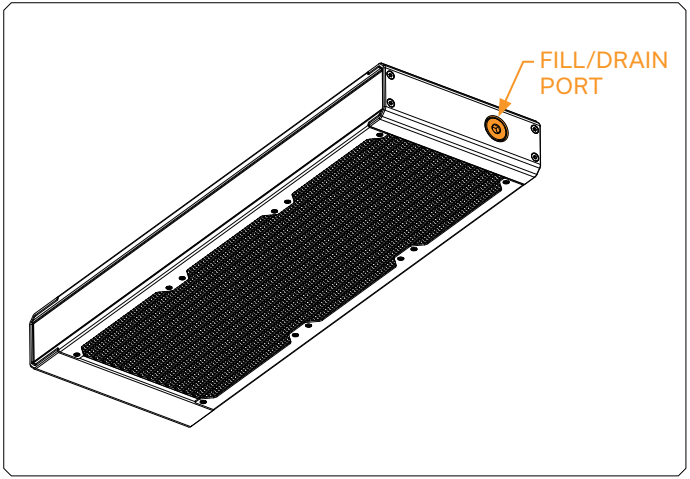

On the Multiport Radiator, opposing to the inlet/outlet side of the radiator, there is an extra port for filling or draining the loop.

It should not be used as an inlet or an outlet port!

EXPLODED VIEW OF THE REMOVABLE COMPONENTS FOR S, P AND X SERIES

EK-QUANTUM SURFACE S SERIES

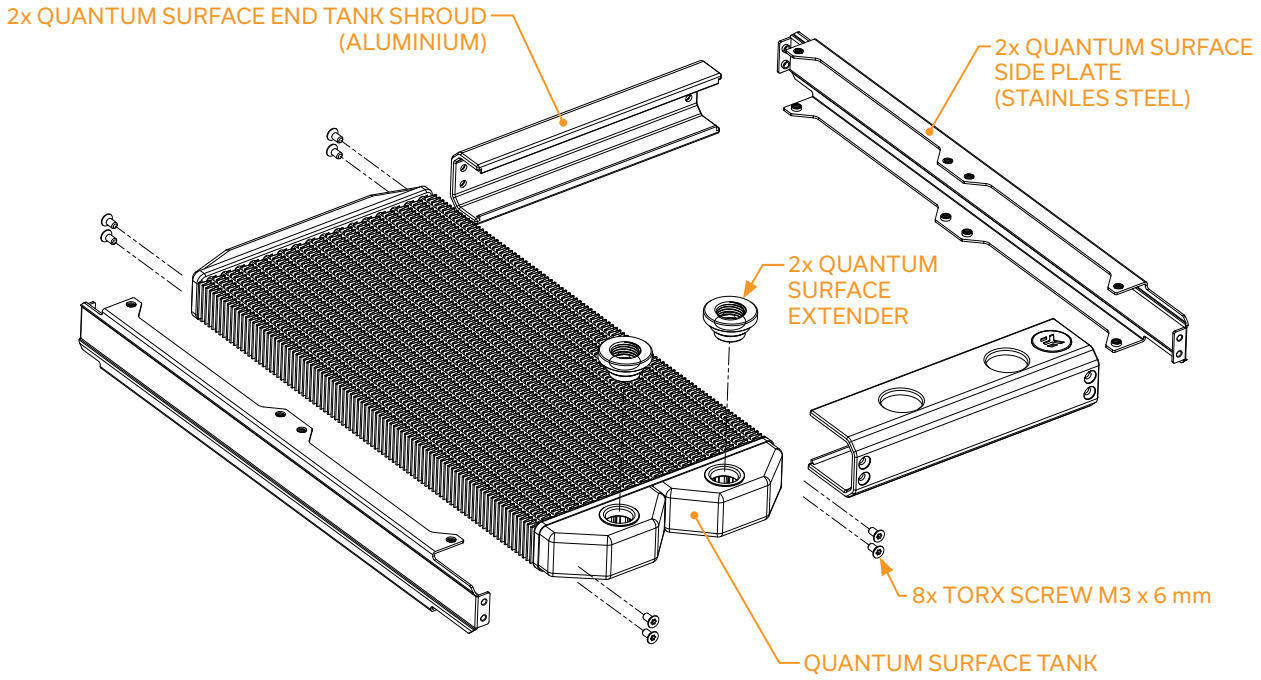

For reference on picture above: EK-Quantum Surface S240

EK-QUANTUM SURFACE P SERIES

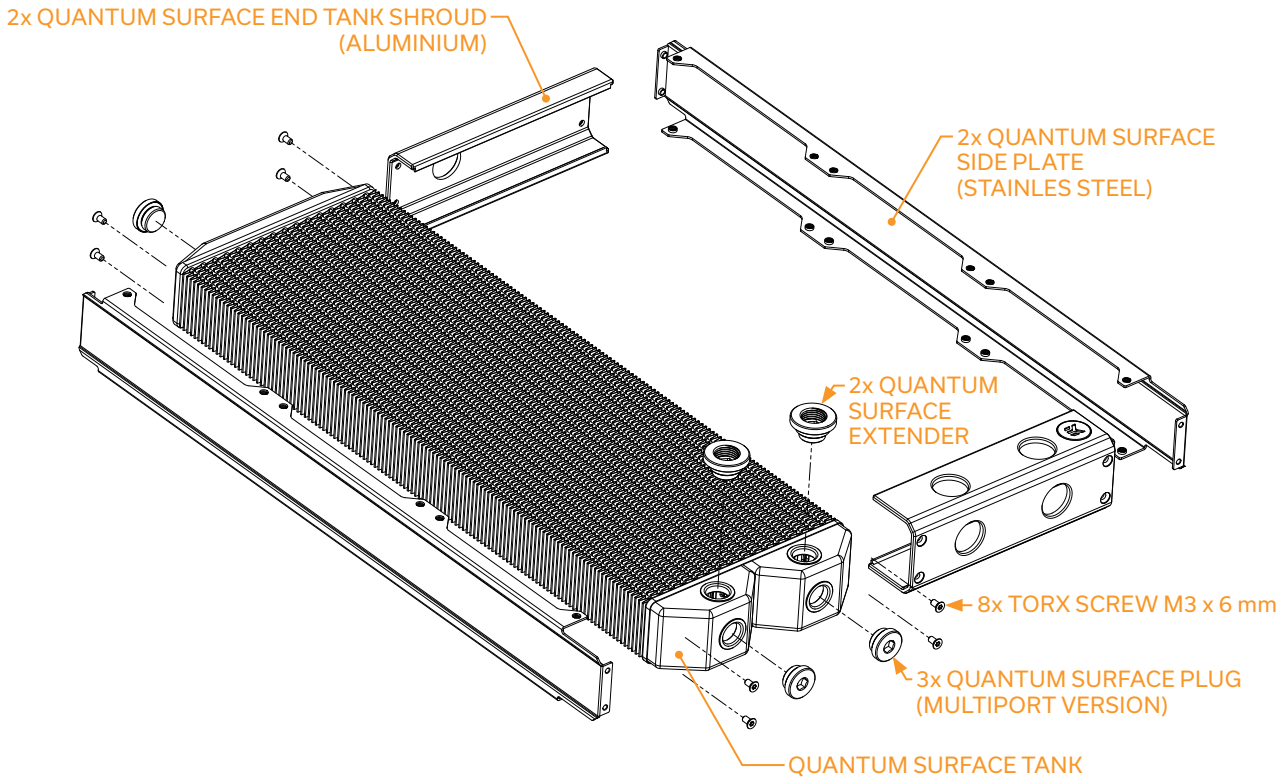

For reference on picture above: EK-Quantum Surface P360M

EK-QUANTUM SURFACE X SERIES

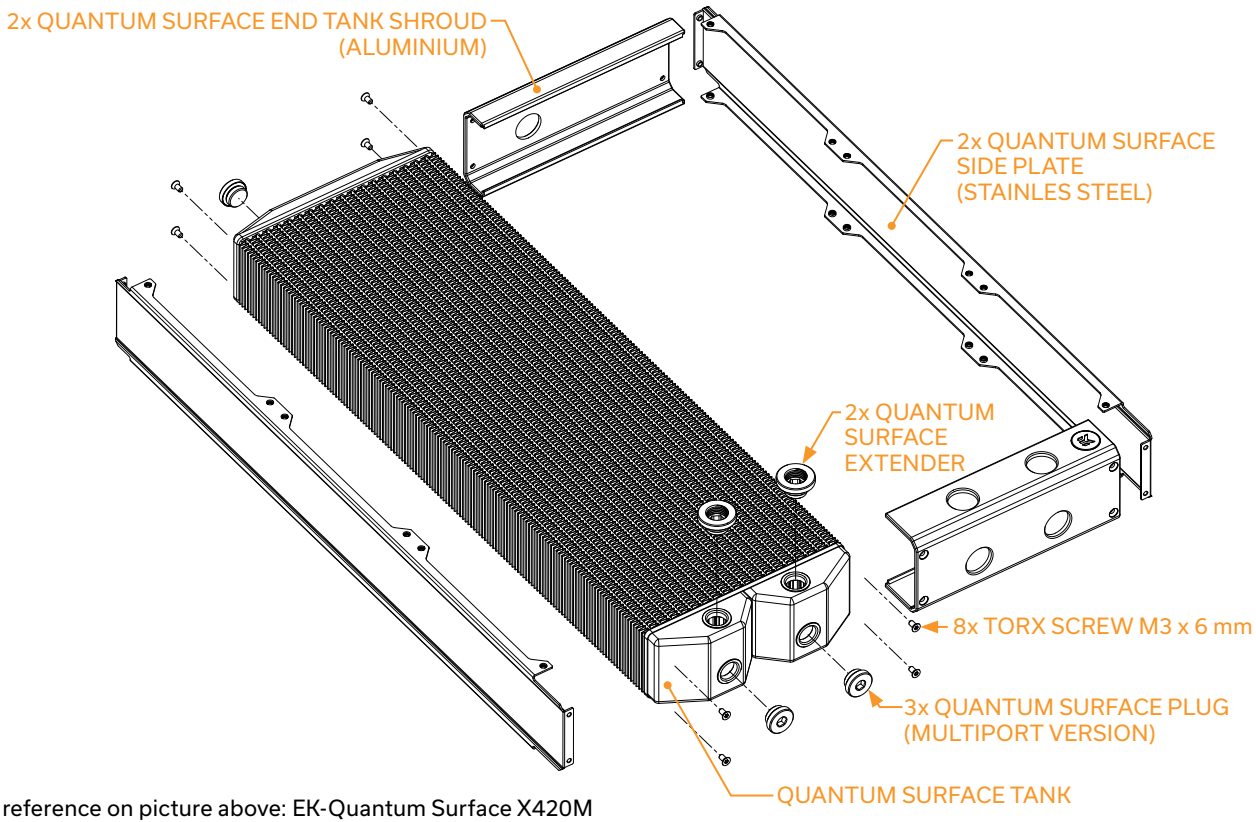

For reference on picture above: EK-Quantum Surface X420M

SUPPORT AND SERVICE

In case you need assistance, please contact:
https://www.ekwb.com/customer-support/

EKWB d.o.o.
Pod lipami 18
1218 Komenda
Slovenia - EU

SOCIAL MEDIA

EKWaterBlocks

@EKWaterBlocks

ekwaterblocks

EKWBofficial

ekwaterblocks