EK-Quantum Magnitude

CPU WATER BLOCK

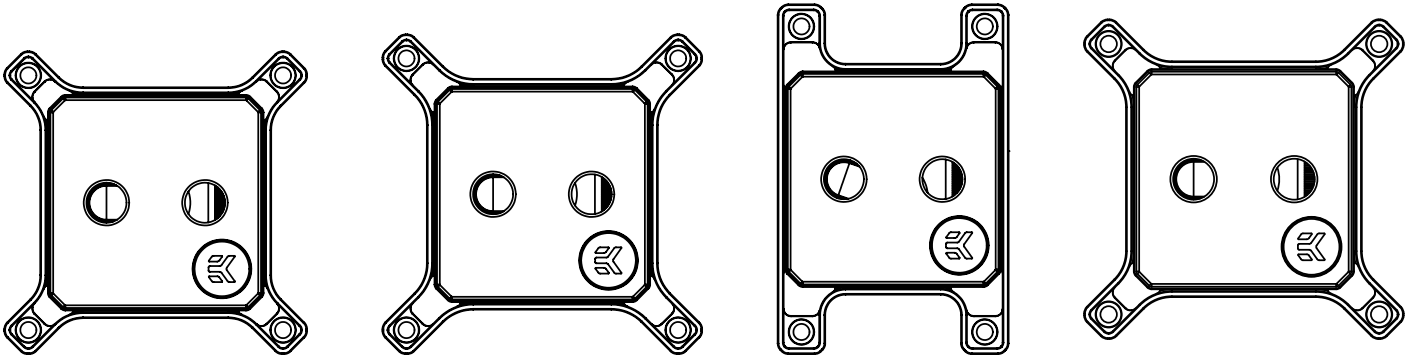

These products are intended for installation by expert users only. Please consult with a qualified technician for installation. Improper installation may result in damage to your equipment. EK Water Blocks assumes no liability whatsoever, expressed or implied, for the use of these products, nor their installation. The following instructions are subject to change without notice. Please visit our web site at www.ekwb.com for updates. Before installation of this product please read all important notices, disclosures and warranty conditions printed on the back of the box.

Before you start using this product please follow these basic guidelines:

Read the entire manual before you start installation!

Please remove your motherboard from the computer to ensure the safest possible mounting process and to prevent the possibility of damage to your GPU or any printed circuit boards (PCB's).

EK-Quantum Torque fittings require only a small amount of force to screw them firmly in place since the liquid seal is ensured by compression of the rubber O-ring gaskets and not the thread itself.

Only G1/4 fittings with a parallel thread should be used (1/4" BSPP), maximum thread engagement is strictly 5.75mm!

The use of corrosion inhibiting coolants are always recommended for any liquid cooling system.

Do not use pure distilled water! For best results EK recommends the use of EK-CryoFuel coolants!

Make sure to thoroughly bleed air out of your CPU Water Block or you will not achieve optimal performance!

TABLE OF CONTENT

COMPATIBILITY 4
WHAT IS ENCLOSED 4

QUICK INSTALLATION GUIDE

PARTS AND TERMINOLOGY 5
CHANGING THE COLDPLATE 7
CHANGING THE ACCENT 8
REPLACING THE JET PLATE 11
REVERSING THE FLOW DIRECTION 13
INSTALLING THE WATER BLOCK - 115X, 1700 AND AM4 16
INSTALLING THE WATER BLOCK - 20XX 18
CONNECTING THE D-RGB LED STRIP 21

SUPPORT AND SERVICE 22
SOCIAL MEDIA 22

COMPATIBILITY

Each EK-Quantum Magnitude CPU Water Block is specific to just one physical socket specification (115X, 20XX or AM4), they are cross compatible with the following electronic socket specifications:

- EK-Quantum Magnitude - 115X
- Intel LGA 1156
- Intel LGA 1155
- Intel LGA 1150
- Intel LGA 1151

- EK-Quantum Magnitude - 20XX
- Intel LGA 2011 (square ILM only)
- Intel LGA 2011-v3 (square ILM only)
- Intel LGA 2066 (square ILM only)

- EK-Quantum Magnitude - AM4
- AMD AM4

- EK-Quantum Magnitude D-RGB - 1700
- Intel LGA 1700

WHAT IS ENCLOSED

- EK-Quantum Magnitude - 115X CPU Water Block
- Mounting Mechanism - 115x/1700/AM4:
  - Screws (4 pcs)
  - Springs (4 pcs)
  - Standoffs - 115x/1700/AM4 (4 pcs)
  - Plastic Washers (4 pcs)
  - Allen (hex) key - 2.5mm
- Rubber Gasket
- Backplate - 115X
- Additional Jet Plate - 0.7C
- Thermal Grizzly Hydronaut (1.0g) Thermal Compound

- EK-Quantum Magnitude - 20XX CPU Water Block
- Mounting Mechanism - 20XX:
  - Screws (4 pcs)
  - Springs (4 pcs)
  - Standoffs - 20XX (4 pcs)
  - Allen (hex) key - 2.5mm
- Additional Jet Plate - 0.6P
- Thermal Grizzly Hydronaut (1.0g) Thermal Compound

- EK-Quantum Magnitude - AM4 CPU Water Block
- Mounting Mechanism - 115x/1700/AM4:
  - Screws (4 pcs)
  - Springs (4 pcs)
  - Standoffs - 115x/1700/AM4 (4 pcs)
  - Plastic Washers (4 pcs)
  - Allen (hex) key - 2.5mm
- Rubber Gasket
- Backplate - AM4
- Additional Jet Plate - 0.6P
- Thermal Grizzly Hydronaut (1.0g) Thermal Compound

- EK-Quantum Magnitude D-RGB - 1700 CPU Water Block
- Mounting Mechanism - 115x/1700/AM4:
  - Screws (4 pcs)
  - Springs (4 pcs)
  - Standoffs - 115x/1700/AM4 (4 pcs)
  - Plastic Washers (4 pcs)
  - Allen (hex) key - 2.5mm
- Rubber Gasket
- Backplate
- Thermal Grizzly Hydronaut (1.0g) Thermal Compound

PARTS AND TERMINOLOGY

The following page shows every individual part of an assembled Magnitude CPU Water Block, all of the terminology labelled is used throughout this manual. In addition, there is a list of every physical variation of these parts and which versions they are used in. While some parts may be physically cross compatible between different Magnitude CPU Water Blocks, they should be assembled as stated for optimal performance. Material, finish and color variations are not listed as it does not affect fitment or performance.

Magnitude CPU Water Blocks which do not feature a D-RGB LED Strip are assembled with a fourth O-Ring between the Top and Accent, this is not used to seal the assembly! It may be exchanged with an LED Strip when adding the D-RGB Accent. Note that the LED Strip connector does not fit through the hole in the Frame!

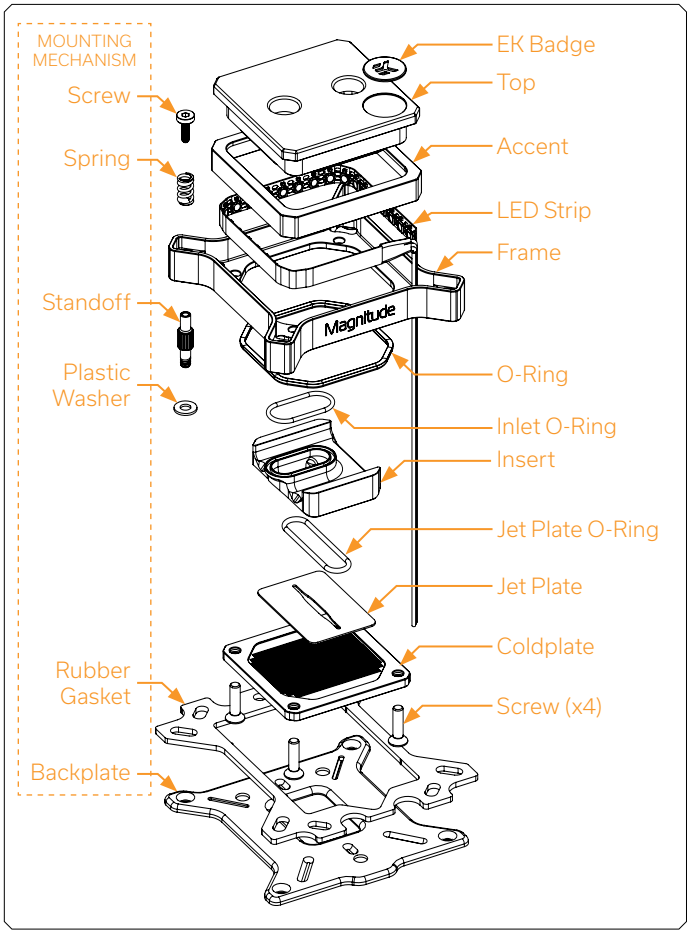

- **EK Badge**
- **Top**
- **Accent**
- **LED Strip**
- **Frame**
  - Frame - 75x75 (115X)
  - Frame - 80x80 (20XX)
  - Frame - 54x90 (AM4)
  - Frame 78x78 (1700)
- **O-Ring**
- **Inlet O-Ring**
- **Insert**
  - Insert - 115X
  - Insert - 20XX
  - Insert - AM4
- **Jet Plate O-Ring**
- **Jet Plate**
  - Jet Plate - 0.5P (20XX and AM4 (default))
  - Jet Plate - 0.6P (20XX and AM4 (optional))
  - Jet Plate - 0.5C (115X (Coldplate - Flat))
  - Jet Plate - 0.6C (115X, 1700 (default))
  - Jet Plate - 0.7C (115X (optional))
- **Coldplate**
  - Coldplate - Flat (115X, 20XX and AM4 (optional))
  - Coldplate - Minor Curve (20XX and AM4)
  - Coldplate - Major Curve (115X)
- **Screw (x4)**

MOUNTING MECHANISM

- **Screw (x4)**
- **Spring (x4)**
- **Standoff (x4)**
  - Standoff - M4 x 21mm (115X and AM4)
  - Standoff - M4 x 14mm (20XX)
- **Plastic Washer (x4)**
- **Backplate**
  - Rubber Gasket (115x,1700,AM4)
  - Backplate - 115X
  - Backplate - AM4

CHANGING THE COLDPLATE

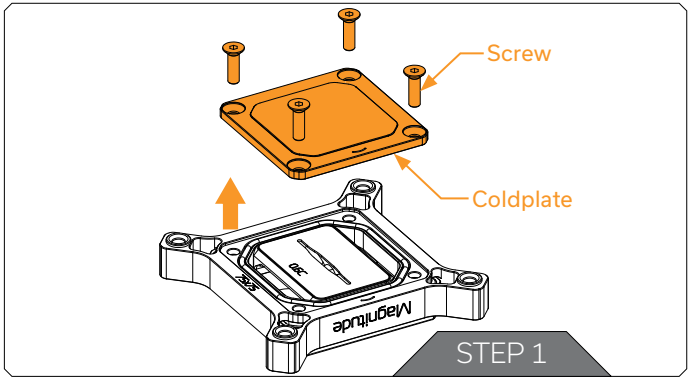

Original Magnitude Coldplates have a subtle curvature to achieve the best possible contact with the IHS of standard CPU's. If you choose to replace or modify the IHS it is also possible to replace the Coldplate of your Magnitude with a Flat version. To install the Flat Coldplate or to re-install your original Curved Coldplate follow these instructions:

STEP 1

Unscrew the four Screws from the bottom of the CPU Water Block in an anticlockwise direction and remove the Coldplate. A 2.5mm Allen (hex) key is supplied for this.

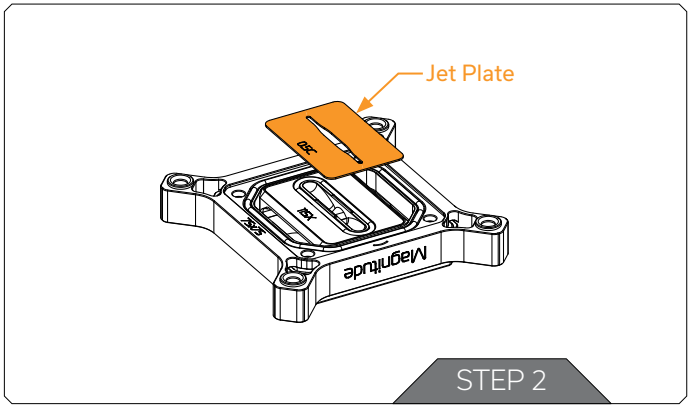

STEP 2

Replace the Jet Plate according to the table below, ensure that it is correctly aligned in the Insert and the O-Rings remain in position

Socket	Default Jet	Optional Jet
115X	0.6C	0.7C
115X - Flat Coldplate	0.5C	-
20XX	0.5P	0.6P
20XX - Flat Coldplate	0.5P	-
AM4	0.5P	0.6P
AM4 - Flat Coldplate	0.5P	-
1700	0.6C	-
1700 - Flat Coldplate	0.5C	-

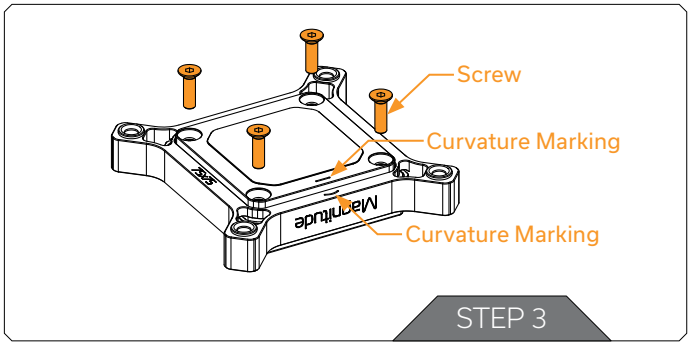

STEP 3
Put the desired Coldplate in place paying attention to the orientation, failure to do so will prevent installation of the Screws. The curvature marking should be on the same side as the curvature marking of the Frame. Lastly screw in the four Screws, do not use excessive force!

CHANGING THE ACCENT

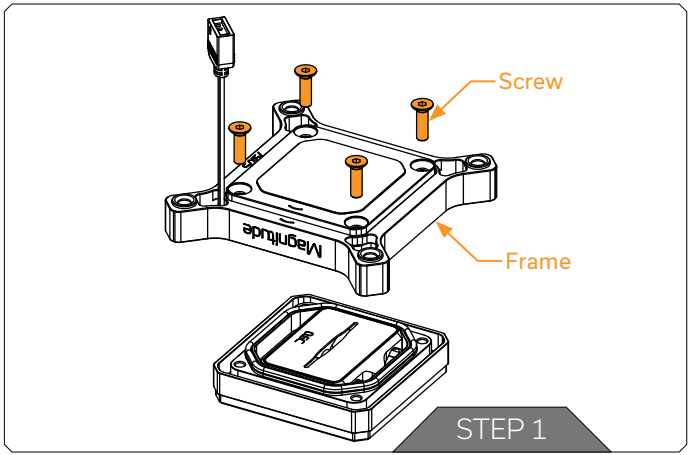

It is possible to exchange the Accent on any Magnitude CPU Water Block for an Accent with a different color or material finish. A translucent D-RGB Accent can also be used to add lighting to any version of Magnitude with an opaque Top.

STEP 1
Unscrew the four Screws from the bottom of the CPU Water Block in an anticlockwise direction, remove the Frame, Coldplate and LED Strip if installed. A 2.5mm Allen (hex) key is supplied for this. If an LED Strip is already installed and you do not wish to change where the cable exits then it does not need to be removed from the Frame.

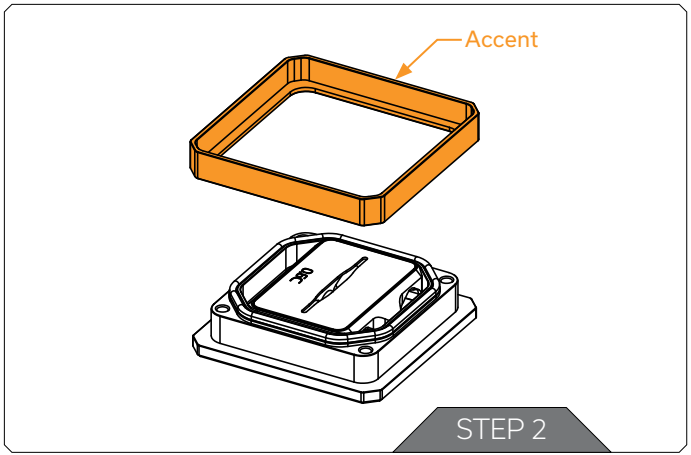

STEP 2

Remove and replace the Accent. The Accent can fit in any orientation.

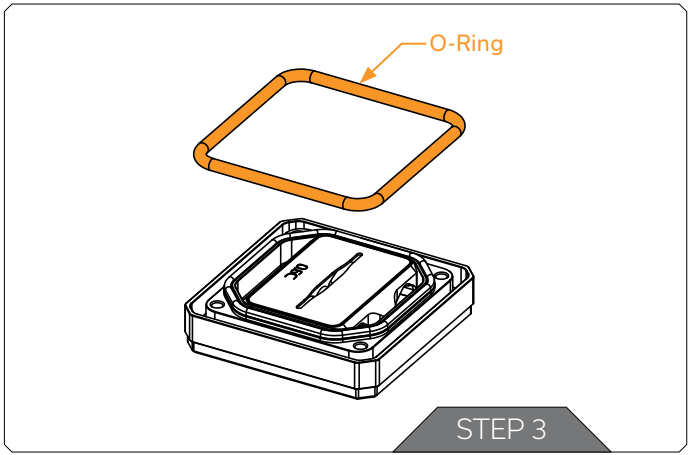

STEP 3 (WITHOUT LED STRIP)

If applicable refit the O-Ring between the Top and Accent. This is not required for operation of the block but ensures the Accent is tightly fitted without an LED Strip.

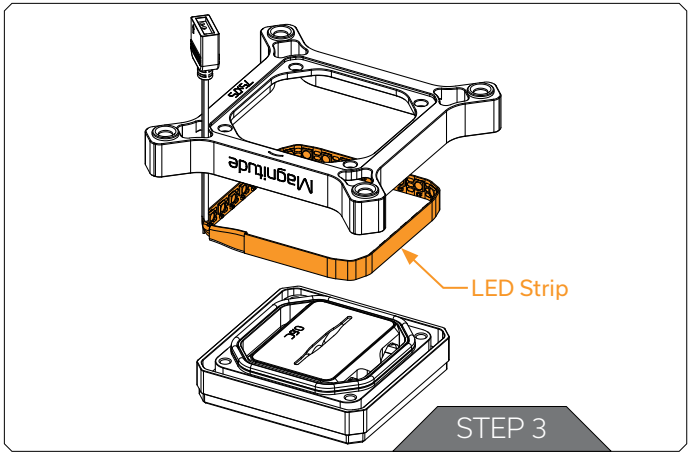

STEP 3 (WITH LED STRIP)

First insert the LED Strip though the desired corner of the Frame and then fit the LED Strip between the Top and Accent. When using a Plexi Top the LED Strip should face inwards. When using an Acetal or Nickel Top the LED Strip should face outwards.

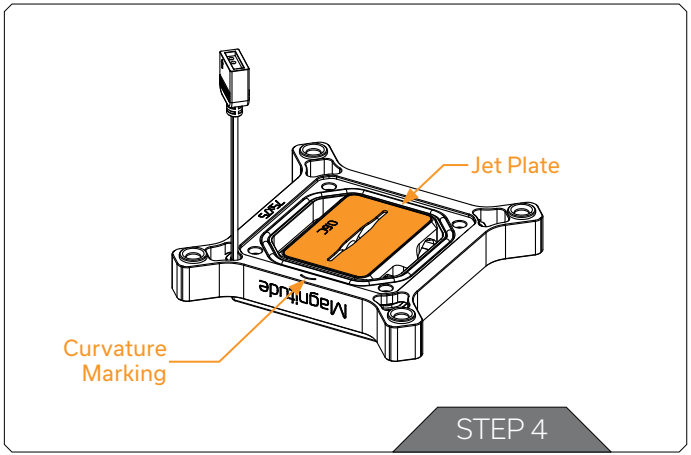

STEP 4

Position the Frame on the Top paying attention to the orientation, failure to do so will prevent installation of the Screws. The curvature marking should be in line with the Jet Plate opening as illustrated. Ensure that the Jet Plate is still aligned in the Insert and the O-Rings remain in position.

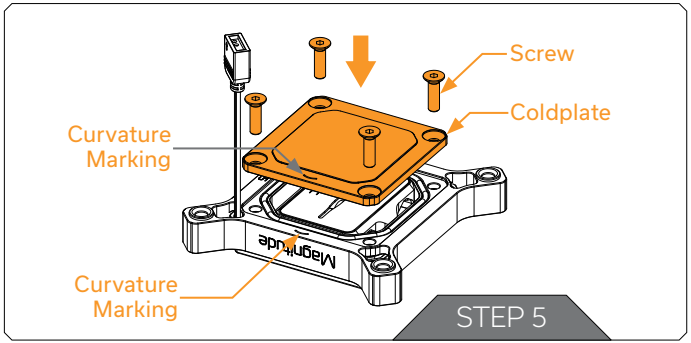

STEP 5
Replace the Coldplate, pay attention to the orientation, failure to do so will prevent installation of the Screws. The curvature marking should be on the same side as the curvature marking of the Frame. Lastly screw in the four Screws, do not use excessive force!

REPLACING THE JET PLATE

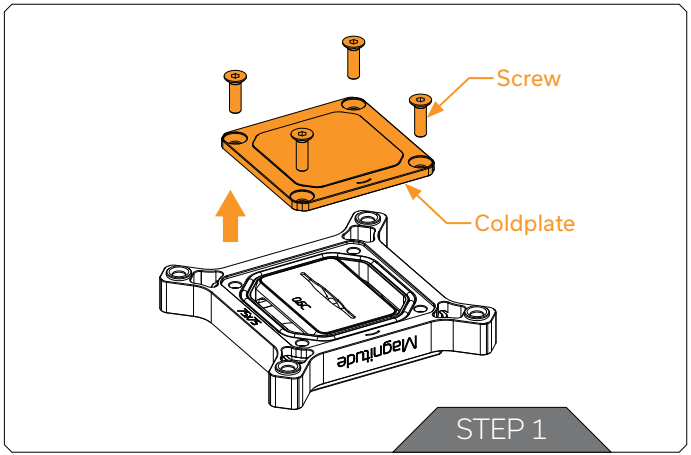

All Magnitude CPU Water Blocks are supplied with an additional Jet Plate that is 0.1mm thicker than the default Jet Plate. If the Coldplate touches the edges of the IHS and prevents optimal contact in the center then it is recommended to install the thicker Jet Plate.

STEP 1
Unscrew the four Screws from the bottom of the CPU Water Block in an anticlockwise direction and remove the Coldplate. A 2.5mm Allen (hex) key is supplied for this.

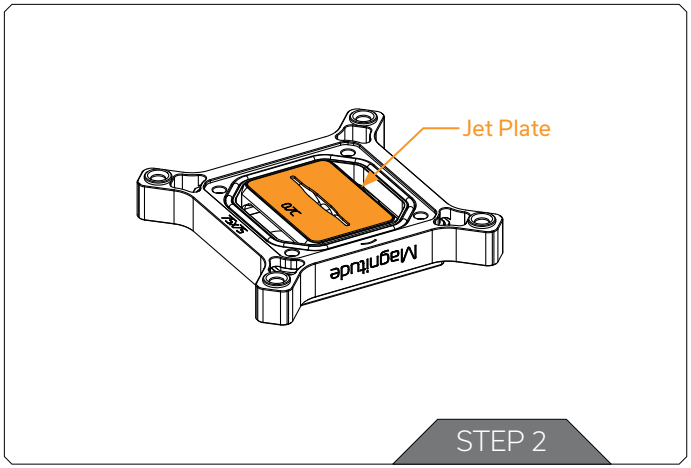

STEP 2

Choose the appropriate Jet Plate according to the table below, ensure that it is correctly aligned in the Insert and the O-Rings remain in position.

Socket	Default Jet	Optional Jet
115X	0.6C	0.7C
115X - Flat Coldplate	0.5C	-
20XX	0.5P	0.6P
20XX - Flat Coldplate	0.5P	-
AM4	0.5P	0.6P
AM4 - Flat Coldplate	0.5P	-
1700	0.6C	-
1700 - Flat Coldplate	0.5C	-

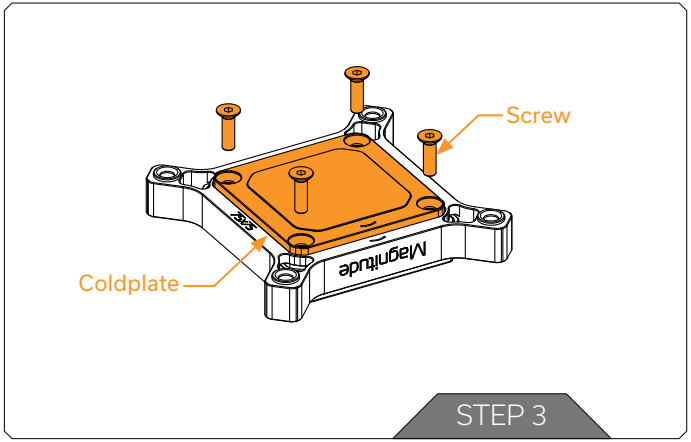

STEP 3

Replace the Coldplate paying attention to the orientation, failure to do so will prevent installation of the Screws. The curvature marking should be on the same side as the curvature marking of the Frame. Lastly screw in the four Screws, do not use excessive force!

REVERSING THE FLOW DIRECTION

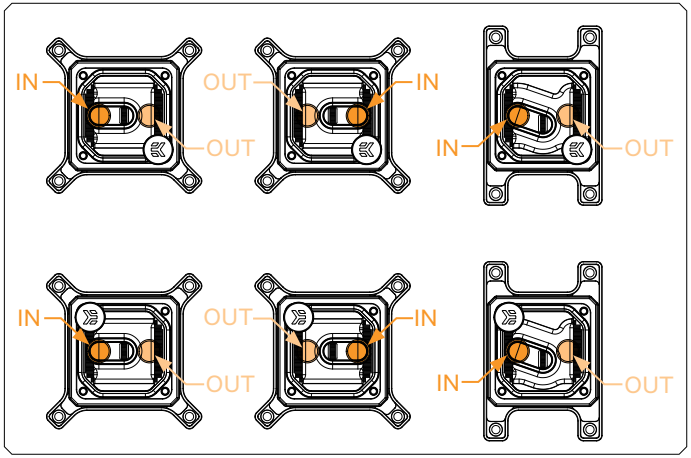

Magnitude 115x,1700,20XX Water Blocks Water Blocks can be assembled with each part in multiple orientations to deliver exactly the same thermal and hydraulic performance when the flow direction or branding must be reversed. For AM4 versions it is not recommended to rotate the Insert relative to the CPU socket due to its asymmetrical design. The following orientations will deliver optimal performance:

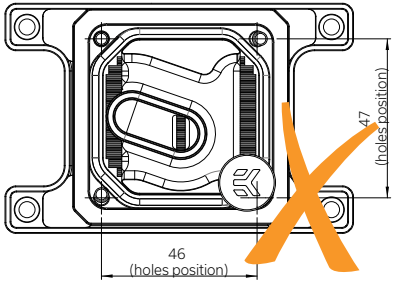

90° rotation of the Insert/Top is not possible

To prevent any possible incorrect assemblies the Screw hole pattern is not square. Consequently the Top, Frame, Insert, Jet Plate and Coldplate can only be rotated by 180° otherwise it will not be possible to install the Screws. The Accent, O-Ring and LED Strip may be installed in any orientation. The Insert can be rotated by following the steps on the next page.

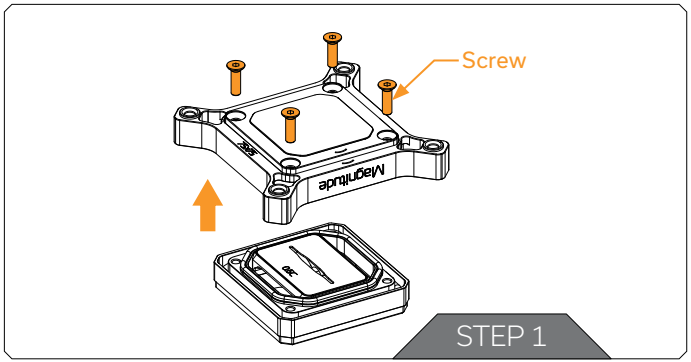

STEP 1
Unscrew the four Screws from the bottom of the CPU Water Block in an anticlockwise direction, then remove the Frame and Coldplate. A 2.5mm Allen (hex) key is supplied for this. If an LED Strip is already installed and you do not wish to change where the cable exits then the Frame does not need to be removed from the cable.

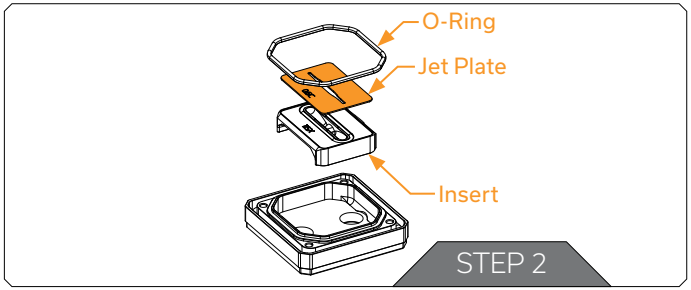

STEP 2
Remove the O-Ring, Jet Plate and Insert.

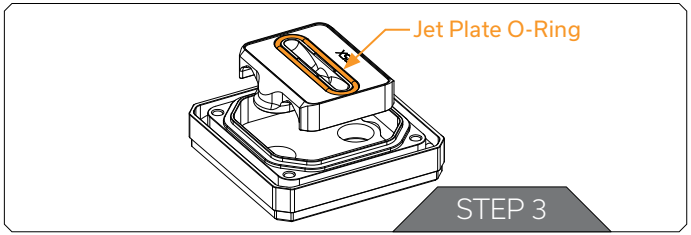

STEP 3
Make sure that the Inlet and Jet Plate O-Rings are still correctly located inside the Insert and place it back into the Top in the desired orientation. Radii on the inside of the Top allow the Insert to fit only two ways.

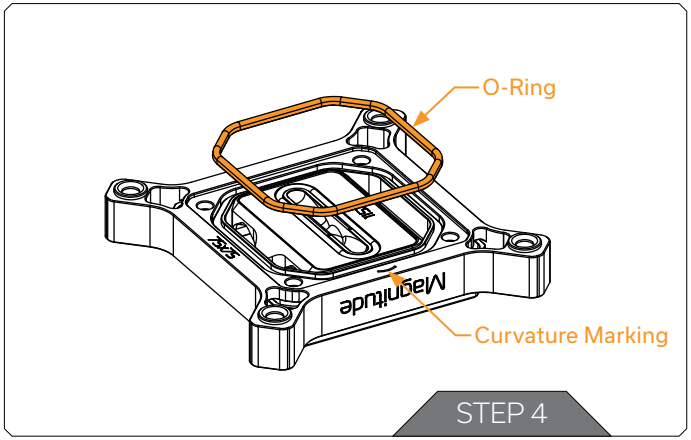

STEP 4

Put the Frame into place and then refit the O-Ring between the Frame and Top. Pay attention to the orientation of the Frame, failure to do so will prevent installation of the Screws. The curvature marking should be in line with either end of the Jet Plate opening as illustrated.

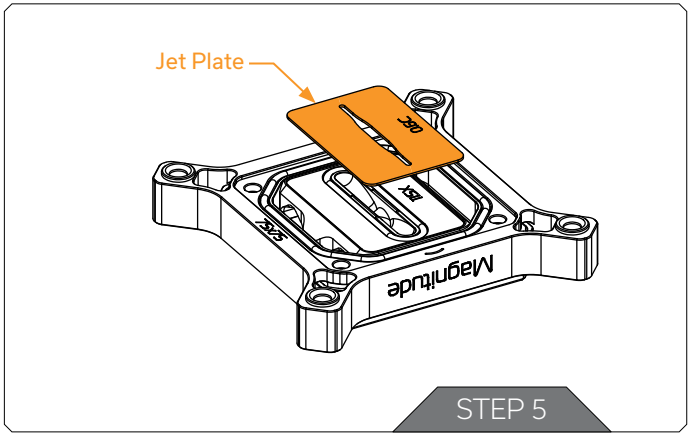

STEP 5

Fit the Jet Plate and make sure it is correctly positioned in the Insert.

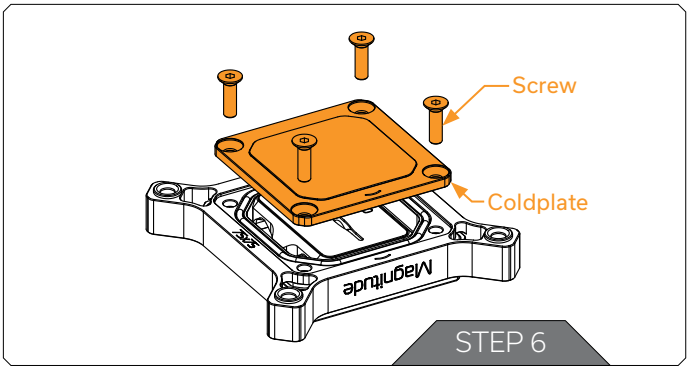

STEP 6
Replace the Coldplate paying attention to the orientation, failure to do so will prevent installation of the Screws. The curvature marking should be on the same side as the curvature marking of the Frame. Lastly screw in the four Screws, do not use excessive force!

INSTALLING THE WATER BLOCK - 115X, 1700 AND AM4

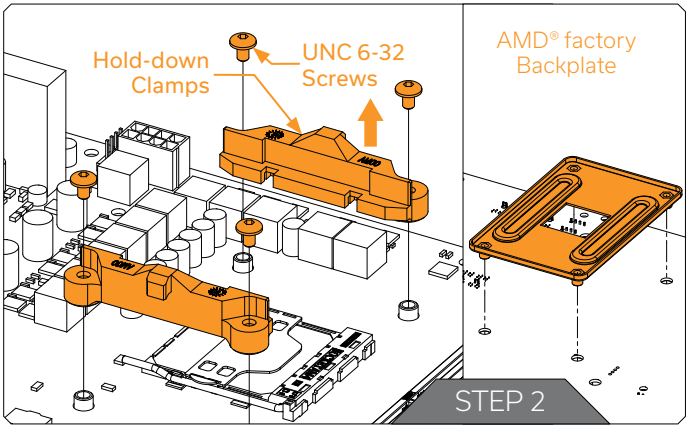

STEP 1
Place the motherboard on an even surface and remove the Mounting Mechanism from the plastic bags. Magnitude CPU Water Blocks include only the parts required for the chosen socket.

STEP 2 (AM4 ONLY)
Using a Philips head screwdriver remove the four UNC #6-32 Screws which secure the plastic hold-down clamps to the motherboard. Remove the clamps as well as the original motherboard backplate and store them away. See the illustration to identify these parts.

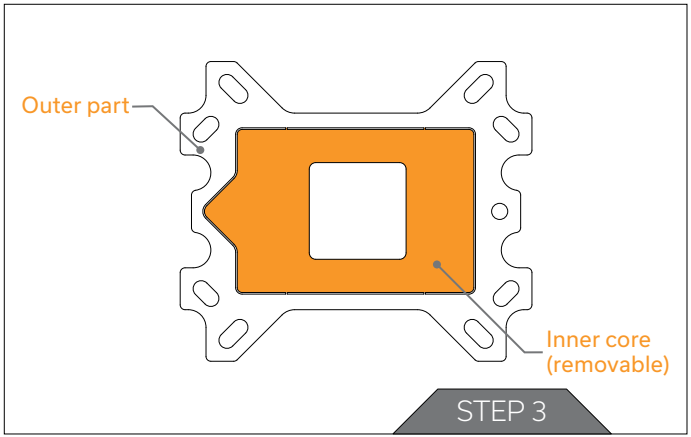

STEP 3 (115X ONLY)

The Rubber Gasket is an essential part of the Mounting Mechanism and must be used. For installation with 115x and 1700 sockets the Inner core must be removed! Both pieces should be used for installation with AM4 sockets.

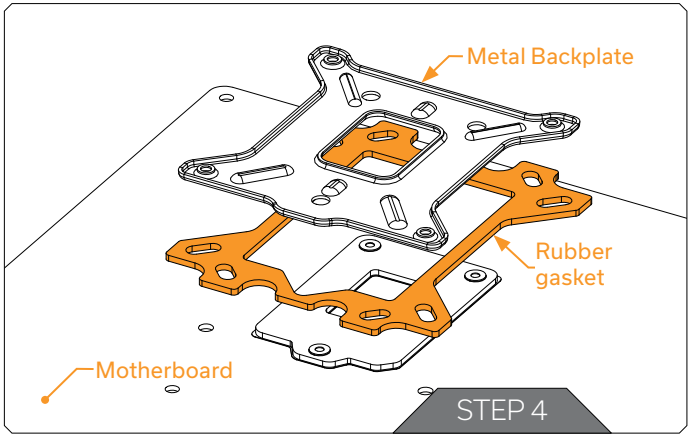

STEP 4

Turn your motherboard face down and position the Rubber Gasket and Backplate directly in line with the mounting holes. The ribbed side of the Backplate should be facing up! Both parts of the Rubber Gasket should be used for AM4!

Once aligned carefully rotate the motherboard assembly while holding the backplate in position with one hand.

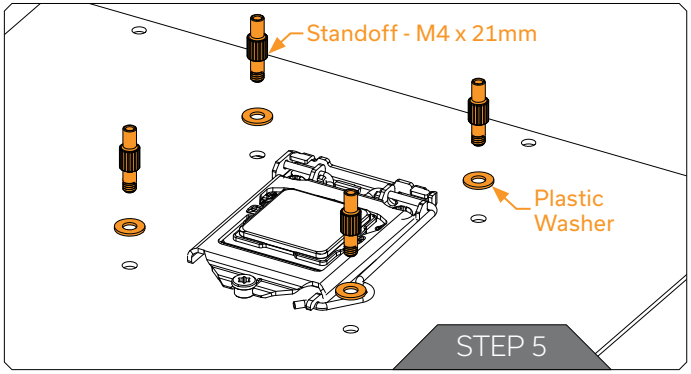

STEP 5
Loosely install all four Standoffs and Plastic Washers before proceeding to tighten them completely. It is mandatory for 115x,1700 and AM4 to install the Plastic Washers as they prevent damage to the motherboard PCB. Using pliers or similar tools is not recommended.

CONTINUE INSTALLATION FROM STEP 3 ON PAGE 19!

INSTALLING THE WATER BLOCK - 20XX

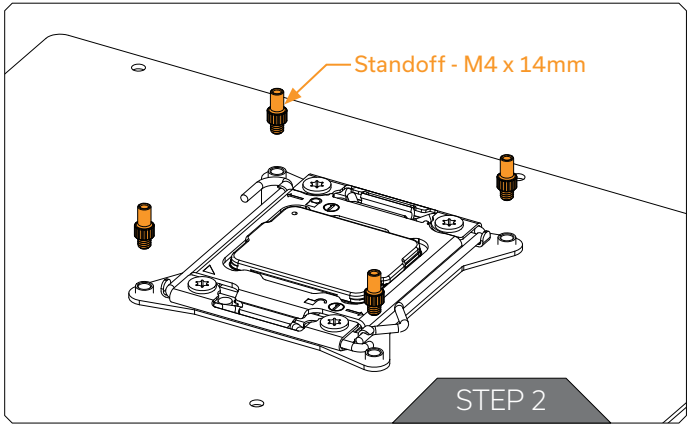

STEP 1
Place the motherboard on an even surface and remove the Mounting Mechanism from the plastic bags. Magnitude CPU Water Blocks include only the parts required for the chosen socket.

STEP 2
Install all four Standoffs tightly into the ILM Heat Sink studs by hand. Using pliers or similar tools is not recommended.

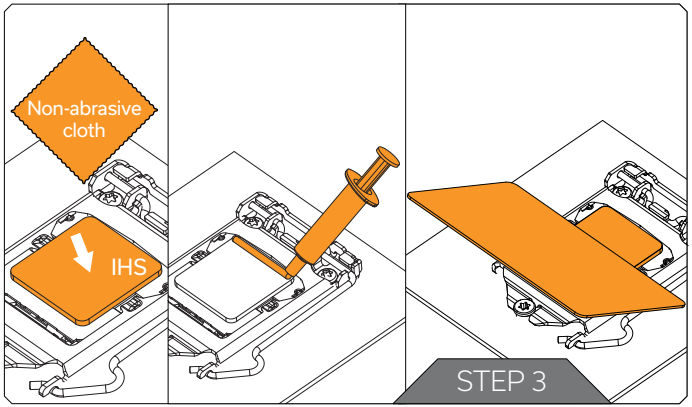

STEP 3

Wipe the IHS clean using a non-abrasive cloth or Q-tip as shown in the illustration. Once clean apply a line of Thermal Compound on one edge of the IHS and use a credit card or similar to spread it evenly.

The layer of Thermal Compound must be thin and even in thickness over the entire surface of the IHS. Excessive or irregular application may lead to poor performance! This method applies for Thermal Grizzly Hydronaut Thermal Compound as supplied with all Magnitude CPU Water Blocks.

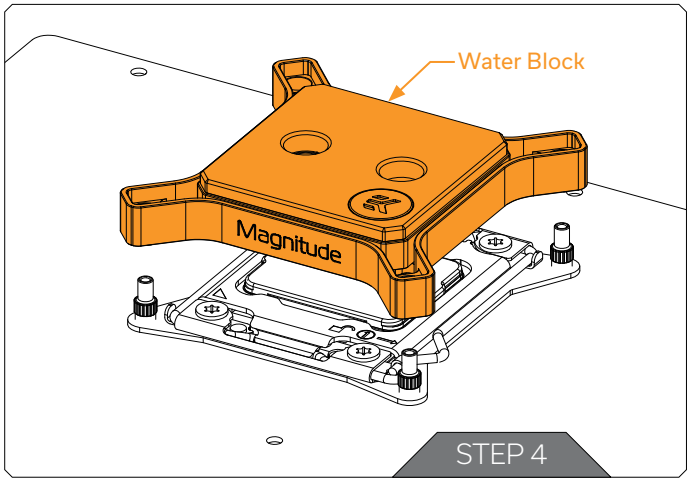

STEP 4

Remove the protective sticker and position the CPU Water Block onto the Standoffs. To achieve optimal performance mount the CPU Water Block in one of the orientations prescribed on page 13.

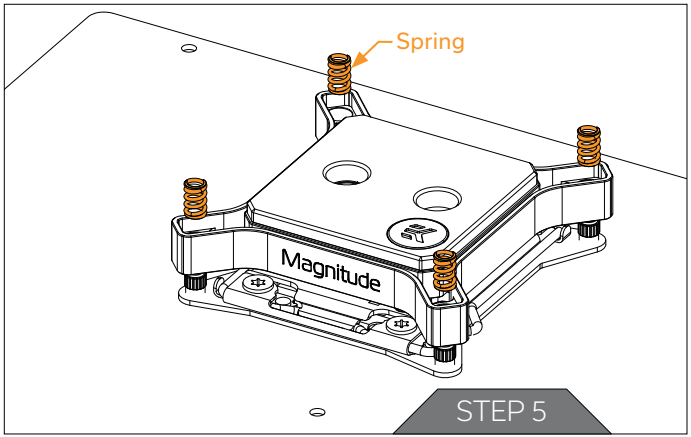

STEP 5
Insert all four Springs inside the Frame.

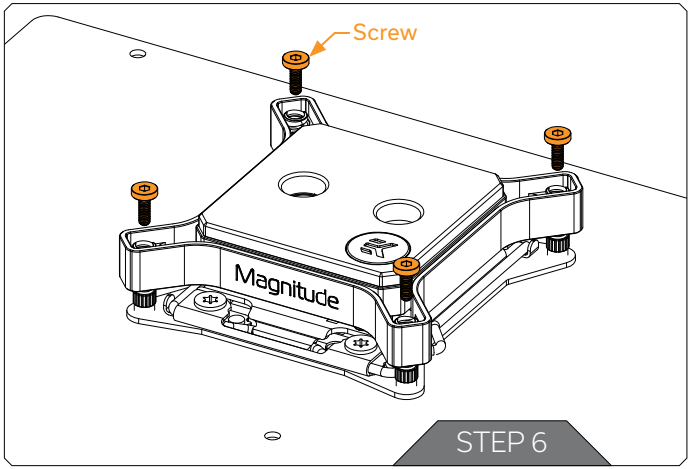

STEP 6
Loosely insert all four Screws before proceeding to tighten them two revolutions at once in a cross pattern. Stop when every Screw is flush with its hole inside the Frame!

Repeat this process from Step 3 onwards after observing the spread of Thermal Compound if you are not certain with the installation. If the Thermal Compound was not thinly spread in the center of the IHS then changing the Jet Plate may improve results, see page 11.

CONNECTING THE D-RGB LED STRIP

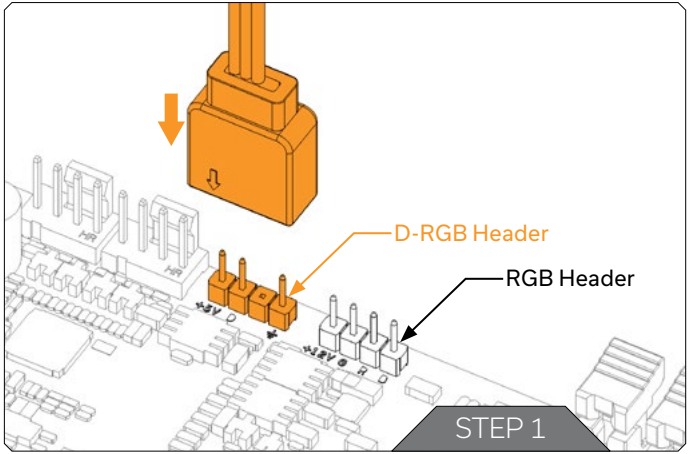

STEP 1

Plug in the 3-pin D-RGB connector from your CPU Water Block to a D-RGB header on your motherboard or controller. The LED Strip will only work if the pin layout on the header is as follows: **+5V**, Digital, Empty, Ground.

Incorrect installation or installation to the incorrect header may result in damage to the LED Strip or header!

SUPPORT AND SERVICE

For assistance please contact:
http://support.ekwb.com/

EKWB d.o.o.
Pod lipami 18
1218 Komenda
Slovenia - EU

SOCIAL MEDIA

EKWaterBlocks

@EKWaterBlocks

ekwaterblocks

EKWBofficial

ekwaterblocks

discord.gg/zesFRJB