EK-Vardar X3M 120ER

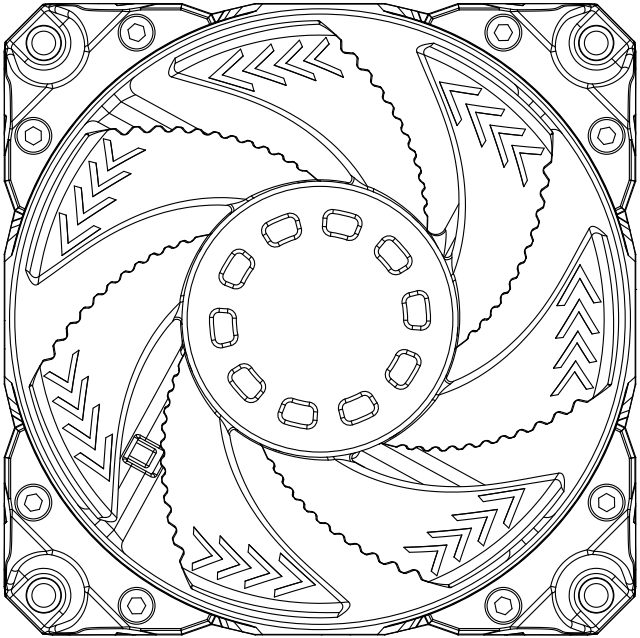

USER GUIDE

This product is intended for installation by expert users only. Please consult with a qualified technician. Improper installation may result in damage to your equipment. EK Water Blocks assumes no liability whatsoever, expressed or implied, for the use of these products or their installation. The following instructions are subject to change without notice. Please, read the manual carefully before beginning with the installation process.

TABLE OF CONTENT

INSTALLING THE FAN ON THE RADIATOR **4**
EK-COOLSTREAM / EK-COOLSTREAM CLASSIC RADIATOR 4
EK-QUANTUM SURFACE RADIATOR 4
INSTALLING THE FAN DIRECTLY **5**
REPLACING THE RUBBER CORNERS (DAMPERS) **5**
CONNECTING THE FANS **6**
SUPPORT AND SERVICE **8**
SOCIAL MEDIA **8**

INSTALLING THE FAN ON THE RADIATOR

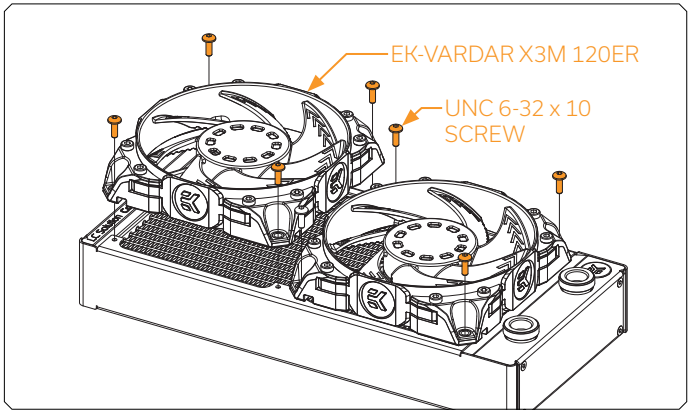

EK-COOLSTREAM / EK-COOLSTREAM CLASSIC RADIATOR

Take the four encosed UNC 6-32 x 10 (10 mm long) screws for each fan and screw them in. The number of enclosed screws depends on the radiator model. Use the enclosed Allen key to tighten the screws in a clockwise direction. Don't use excessive force while tightening the screws.

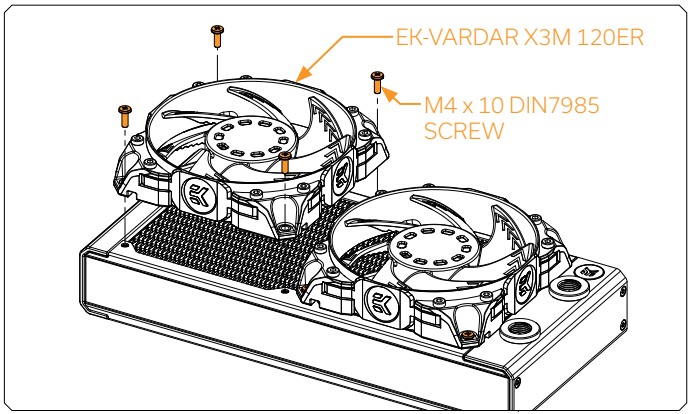

EK-QUANTUM SURFACE RADIATOR

In the case of using the EK-Quantum Surface radiators, it is mandatory to select the M4 x 10 DIN7985 Screws (https://www.ekwb.com/shop/ek-loop-phillips-head-screw-set-m4x10mm-black-20pcs) to secure the fan-s.

Use the Phillips Head Screwdriver to tighten the screws in a clockwise direction. Don't use excessive force while tightening the screws.

INSTALLING THE FAN DIRECTLY

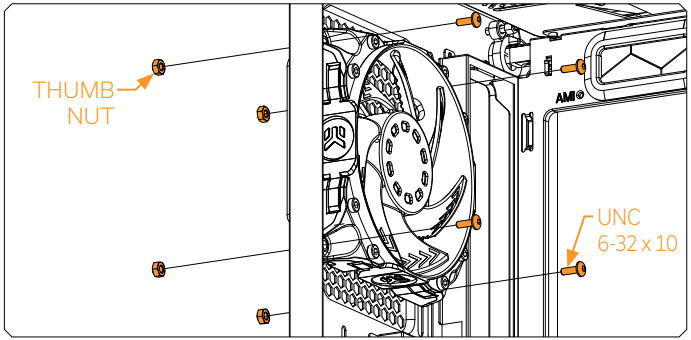

Using the enclosed mounting screws and thumb nuts you can mount the EK-Vardar X3M fan directly to your chassis or any other standard fan mounting location.

REPLACING THE RUBBER CORNERS (DAMPERS)

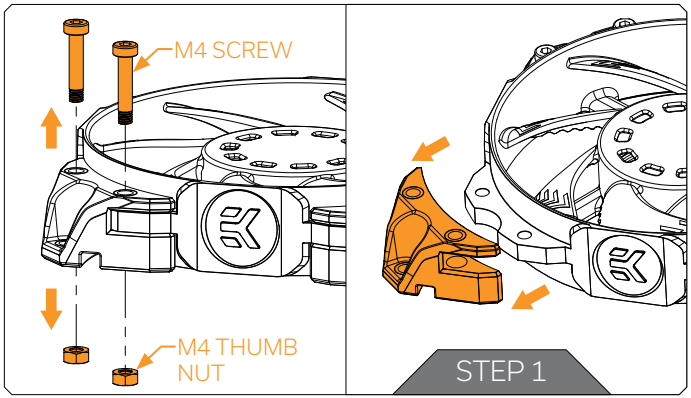

STEP 1

First unscrew pre-installed M4 screws and thumb nuts using Allen key (as shown on the photo). Carefully take off the rubber corner and save the screws and nuts for later use.

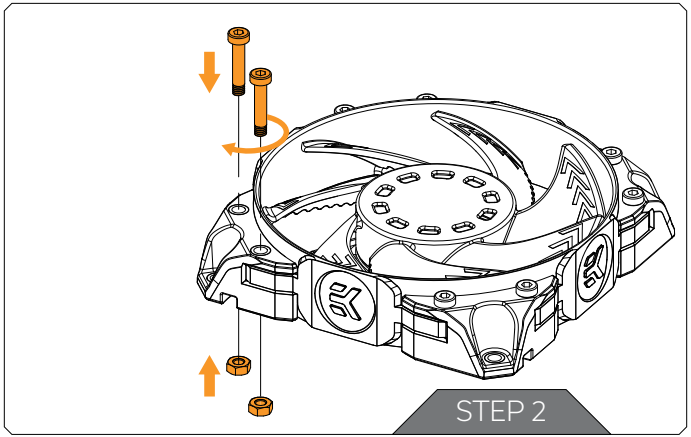

STEP 2
New dampers need to be secured with M4 screws and Thumb nuts. Don't use excessive force while tightening the screws.

CONNECTING THE FANS

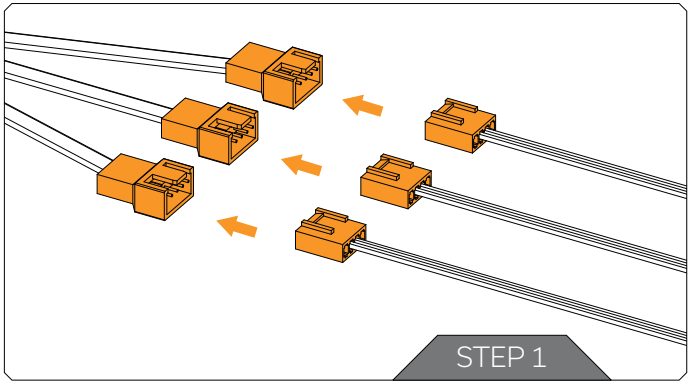

STEP 1
To connect the fans you might need EK-Cable Y splitter.
Connect the female connectors from the fans with male connectors on the fan splitter cable.

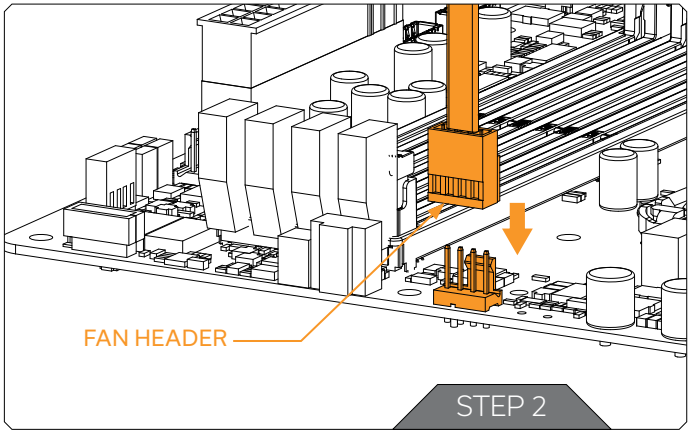

STEP 2

Connect the female EK-Cable Y splitter connector to the male connector header located on the motherboard. Always use CPU-dedicated fan headers if possible.

Always use CPU fan header. On majority of motherboards these headers usually offer best PWM regulation.

SUPPORT AND SERVICE

For assistance please contact:
http://support.ekwb.com/

EKWB d.o.o.
Pod lipami 18
1218 Komenda
Slovenia - EU

SOCIAL MEDIA

EKWaterBlocks

@EKWaterBlocks

ekwaterblocks

EKWBofficial

ekwaterblocks

discord.gg/zesFRJB